Petrochemical
Perspectives in Liquid Process Analytics

2
News

INGOLD
Leading Process Analytics

# Dissolved Oxygen Measurement
## Lowers Costs of Corrosion in Offshore Application

**Seawater injected in petroleum reservoirs is monitored for dissolved oxygen with an InPro 6900 i sensor in order to prevent corrosion and scaling of steel injection pipes. Thanks to effective treatment thousands of dollars are saved!**

### Process

Petroleum is found in porous rock reservoirs which are covered by dense rock layers. In the reservoirs high pressures up to 300 bar (over 4000 psi) exist. The continuous extraction of oil from the wells diminishes the exiting pressure with time, reducing the output of the well. Usually only 30 % of the oil in the reservoir is extracted. In order to increase the oil recovery seawater is injected through the well into the reservoir.

Dissolved oxygen is one of the key contributors to serious corrosion of the steel injection pipes. Oxygen also stimulates the growth of bacteria which can cause scaling, produce harmful substances and lower the oil output. Therefore the seawater must first undergo treatment before being injected. In the deaeration or deoxygenation system dissolved oxygen is removed through the addition of an oxygen scavenger, in this case sodium bisulfite.

### Application

In the deaerator first a countercurrent gas flow brings the level of oxygen down to 60 to 200 ppb. As this level is still much too high sodium bisulfite is added to chemically reduce almost all of the remaining oxygen. Too much of this salt would however have a negative impact on the oil quality. Therefore to accurately control the dosing of sodium bisulfite the dissolved oxygen level is measured down to 1 ppb.

Following the deaeration the water is filtered and through a series of pumps the pressure is increased before it is finally

METTLER TOLEDO

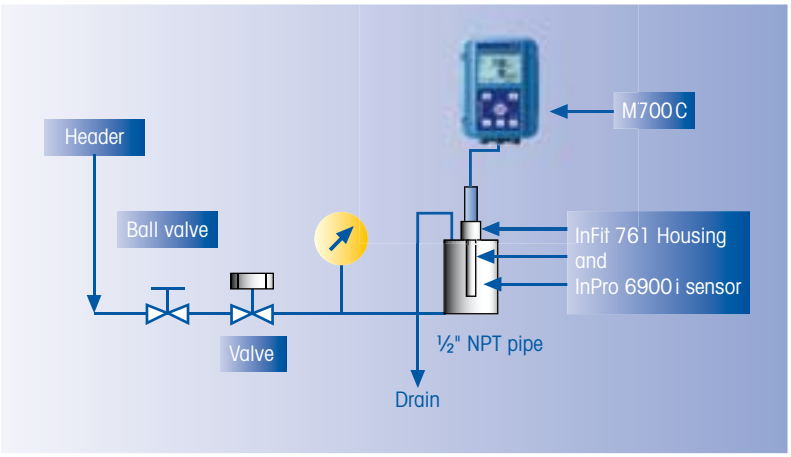


Oxygen measurement at the header exit, just before water injection into the well.

injected into the reservoir. The ideal place to measure the dissolved oxygen concentration is in the header exit as shown in the drawing. At this location however the pressure is above 140 bar (2000 psi) which is too high for the instrument. Therefore the sensor is placed in a sample line where pressure reducing valves lower the pressure of the deaerated water to an acceptable level.

## METTLER TOLEDO solutions

Since the oxygen concentration measured in the injection water is usually lower than 10 ppb, METTLER TOLEDO has offered its trace oxygen electrode InPro 6900 i. Besides its very high accuracy in extremely low oxygen concentrations the electrode allows for fast and easy maintenance. Since the electrode is placed in a sample line which can be isolated, an InFit 761 static electrode housing is sufficient for this application. The M700 transmitter completes the measurement point and offers both enhanced sensor – and transmitter diagnostics.

## Benefits

The injection water can be monitored easily and accurately for dissolved oxygen with METTLER TOLEDO's trace oxygen measurement solutions. This allows for efficient control of oxygen removal which seriously lowers the risk of corrosion and scaling in the steel injection pipes. Consequently thousand of dollars are saved on maintenance and replacement of materials. Also clogging of the porous rock formations in the reservoir is prevented thereby maximizing the oil output.

Multi-parameter transmitter M700 C.

Oxygen sensor InPro 6900 i.

Stationary housing InFit 761.

**www.mt.com/DO**

**Publisher / Production**
Mettler-Toledo AG
Process Analytics
Im Hackacker 15
CH-8902 Urdorf
Switzerland

**Illustrations**
Mettler-Toledo AG
Cenco Refining Co

# Significant Process Improvement
## With ISM Technology

**Digital ISM® pH electrodes monitor critical parameters on-line leading to enhanced process reliability paired with low maintenance of the electrodes and low process downtime.**

### A logical evolution

Many years of experience in the field of industrial measurement systems form the basis of METTLER TOLEDO's competence. Now with its ground-breaking ISM technology, it combines these years of experience with digital technology and processing power for advanced sensor diagnostics.

### The digital ISM solution

Specific to the new line of ISM pH electrodes is that signal processing takes place within the electrode head itself. Digitalizing the signal where the sensing element is a logical idea, because low impedance signal transmission is much less prone to electromagnetic interferences.

### ISM technology allows reduced maintenance of electrodes

In addition to its digital signal, each ISM pH electrode continuously performs its own "health check" and monitors such critical parameters as reference impedance for pH on-line. By doing so, it can alert the user of a possible junction blockage, allowing him time to take preventive measures. This is just an example of what ISM is able to do for better process control. Across the world, ISM technology has clearly demonstrated its usefulness in hundreds of successful applications.

### iSense strengthens the ISM value proposition

iSense is a very user-friendly and unique software tool. Just connect your ISM electrode via a USB port to your computer:

- iSense boosts the benefits of ISM
- Easy electrode pre-calibration in the laboratory
- Unique visualization of the electrode performance

### iSense allows true electrode asset management

- Self-generated pdf protocols
- Database of all electrode actions

### The following pH electrodes with ISM technology are available:

- InPro 3250 i
- InPro 4260 i
- InPro 4800 i
- InPro 2000 i
- InPro 3100 i

**www.mt.com/ISM**


Multi-parameter transmitter M400.

pH electrode InPro 3250 i.

pH electrode InPro 4260 i.

# InPro 7250 PFA – the Problem-Solver for Highly Aggressive Applications

**This inductive conductivity sensor is designed for highly demanding applications in petrochemical applications performing with highest measurement accuracy.**

## Resistance paired with measurement accuracy

The METTLER TOLEDO inductive conductivity sensor InPro 7250 PFA consists of two high precision coils hermetically sealed in a robust and chemically resistant polymer matrix perfluoroalkoxy (PFA). The sensor carries the same outstanding measurement quality as the PEEK version, but is even more resistant to aggressive chemicals. PFA is inert to strong mineral acids, inorganic bases, inorganic oxidizing agents and to salt solutions.

This robust design makes it the ideal solution to in-line chemical concentration control in harsh environments where accurate, fast and economical measurements are requested.

## Chemical processes: Wide coverage of application conditions

In processes where the concentration of caustic is critical to product quality and yield, the InPro 7250 PFA allows reliable process control, even at high temperatures.

Despite sophisticated chemical treatment programs, scaling and fouling of organic nature are common in cooling water systems. Insensitive to fouling and strong acids, the InPro 7250 PFA sensor definitely is a best-practice choice of instrumentation.

Conductivity sensor InPro 7250 PFA.


Conductivity transmitter 7100 e.

### Your benefits

- Wide measurement range
- Broad range of applications
- Insensitive to fouling
- Resistant to chemicals even to strong acids
- Highest measurement accuracy
- Attractive price/performance ratio
- Maximum process safety
- Maintenance free

## Industrial waste water: Monitoring effluents

Continuous monitoring of industrial effluents is a critical factor not only for ecological reasons but also for economic plant operation. Since the inductive conductivity sensor InPro 7250 PFA is not susceptible to fouling, it is particularly well suited for such applications.

**www.mt.com/inpro7250PFA**

# InTrac 785 –
## for Demanding Chemical Applications

**The new InTrac 785 from METTLER TOLEDO is a highly flexible and robust retractable housing for demanding chemical processes. It has been designed for high operational safety and low maintenance.**

### InTrac 785 allows in-line sensor operation

The InTrac 785 retractable housing is the easy and economical way of getting access to the sensor without process interruption. Whenever maintenance on the sensor is required, a simple retraction of the sensor and closing the ball valve allows fast sensor servicing.

### InTrac 785 for harsh applications

Different materials for medium wetted parts enable the housing for usage in harsh environments as commonly found in

- chemical and
- petrochemical applications.

### InTrac 785 – adaptable also to your process

The InTrac 785 allows a wide range of installation possibilities, thanks to the variable insertion length up to 220 mm (8.66") and a wide variety of process connections. Whether the ball valve is already present or if a factory standard needs to be used, the InTrac 785 can also be obtained without ball valve and process connection.

### Flexibility in maintenance intervals

You can gain access to the sensor without interrupting the process. The simple retraction and the process sealing via ball valve allows easy maintenance. With the T-handle no tool is required for daily operation and to get sensor access.

### Wide range of installation options

The unique design provides further versatility by accepting

- pH,
- dissolved oxygen and
- turbidity measurements.

### Increased production uptime

The durable design ensures reliable operation in the most aggressive applications. The housing is available in stainless steel Hastelloy or titanium with Viton® or Kalrez® sealing.

### High operational safety with ball valve

The ball valve is the industry proven solution to separate the process from the environment. The InTrac 785 has been engineered with an integral anti-blowout tip for maximum safety. The ball valve of the InTrac 785 safely isolates the sensor from the process for safe, continuous operation.

www.mt.com/intrac785

# Process Analytics Product Catalog
## New Edition 08/09 Available

**Get an overview of the latest INGOLD and THORNTON products available for your process application with the new product catalog 08/09.**

The catalog offers comprehensive overview on product features and specifications, benefits and recommended application areas, order details and much more for process analytics measurement solutions.

The product catalog covers complete measuring solutions for the parameters:

- pH
- Dissolved oxygen and $O_2$ in gases
- Ozone
- Dissolved $CO_2$
- Conductivity
- Turbidity
- TOC
- Flow

The featured product range includes:

- Electrodes / sensors
- Housings
- Process connections
- Transmitters / analyzers
- Cleaning and Calibration systems
- Cables
- Accessories

Order your copy of this useful desk tool today!

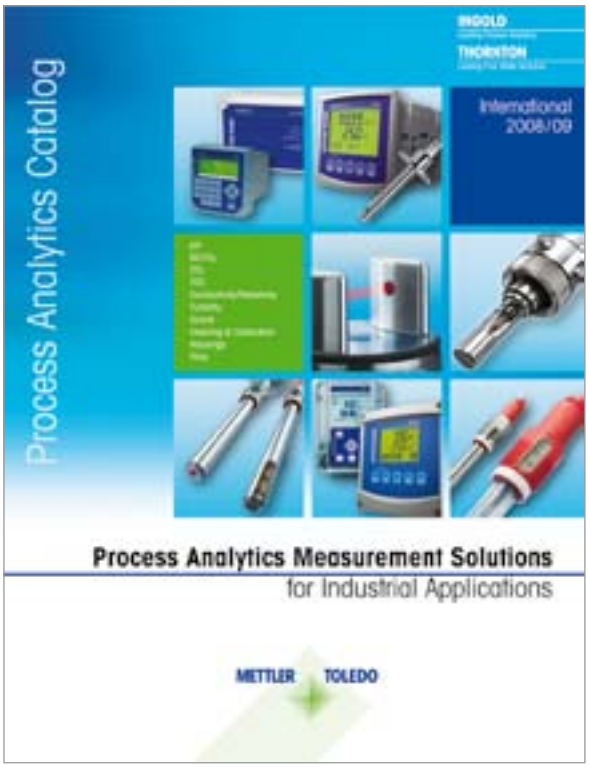


**Mettler-Toledo AG**
Process Analytics
Im Hackacker 15
CH-8902 Urdorf
Switzerland

**www.mt.com/pro**
Visit for more information