Smart Sensors

THORNTON
Leading Pure Water Analytics

770MAX Smart Sensors

- pH
- ORP
- Dissolved Ozone
- Dissolved Oxygen
- Temperature, Pressure, Vacuum, Tank Level
- Smart Signal Adapters

Simple and Efficient

Pure Water and Process Measurement

METTLER TOLEDO

770MAX Detachable pH and ORP Sensors

Thornton offers detachable sensors with an electrical connector directly on the electrode body to allow flexible and low cost electrode replacement, separate from the preamplifier. A variety of housings, including retractable models are available.

Measuring electrode:	Glass pH, platinum ORP
Reference electrode:	Silver-silver chloride with double junction or equivalent
Temperature compensator:	Pt1000 RTD included in all pH sensors; not in ORP sensors
pH range:	0-14 except 2-12 for 52 000 512
Maximum flow:	10 ft/s (3 m/s)
Maximum cable lengths:	300 ft (91 m) patch cord, 33 ft. (10 m) preamp cable
Connectors:	pH - VP; ORP - S8

Preamplifiers

Thornton 1200-series pH/ORP preamplifiers are used with electrodes and housings to provide complete sensors. The resulting amplified pH or ORP signal can be sent reliably long distances over patch cords to Thornton 770MAX instruments. These preamplifiers include galvanic isolation to prevent any interaction between channels and an internally shielded ABS polymer enclosure for maximum corrosion resistance and electrical noise immunity. By jumper selection, they can operate either with or without a solution ground, depending on the type of electrode and housing. A solution ground optimizes stability by eliminating most interference from stray potentials and electrical noise in the solution. A solution ground can make the measurement more tolerant of an aging reference electrode and effectively extend its life.

Flow Installation

Because pH sensors require frequent calibration, installation in a side stream with isolation valve(s) for convenient access is desirable whenever possible. Also where possible, provide discharge to an open drain for optimum life and performance. Any reducing fittings must not prevent the tip of the sensor from being submersed in the sample. The pipe tee may be mounted at an angle as shown to eliminate any air gap. However this angle must be at least 15° above horizontal.

Submersion Installation

To install from the top of a tank, use a pipe coupling and support pipe compatible with the NPT size of the housing or electrode and with inside clearance for the diameter of the connector: 0.79" (20 mm) for VP or 0.63" (16 mm) for AS9. Select a preamp cable length as long as the support pipe plus additional length as needed to remove the support pipe from the tank if the preamp is permanently mounted.

In all cases, pH electrodes need to be mounted with the electrical connection end at least 15° above horizontal to assure reliable contact of the internal electrolyte with the glass membrane. They must not be mounted horizontally into the side of a tank or pipe.

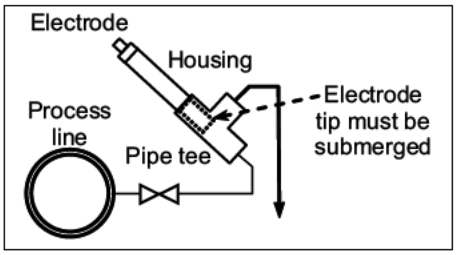

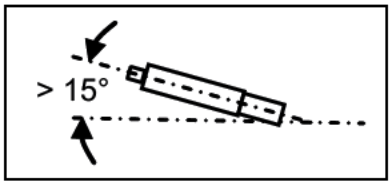

A complete pH or ORP installation requires **1** an electrode, **2** a housing and **3** a preamp from each of the tables below. In addition, each installation requires a patch cord and instrument. Double lines divide groups of compatible electrodes and housings.

Electrode (1)				Housing (2)	
Application	**Rating**	**Fitting / Material / Connection**	**Part No.** Ref. No.	**Connection / Material / Rating**	**Part No.**
pH, general purpose, low cost	30psi (2 bar) at 60 °C & 75psi (5 bar) at 45 °C	PG13.5 / polysulfone & glass / VP	**52 000 512** 4010-120-Pt1000	3/4″NPT insertion or submersion*** / CPVC / 100psi (7 bar) at 20 °C & 30psi(2 bar) at 80 °C	**53 300 021**
pH, general purpose, high pressure	See housing limits	PG13.5 / glass / VP	**52 002 146** 4250-120-Pt1000		
pH, general purpose & moderately pure waters**	100 °C 60psi (4 bar)	PG13.5 / glass / VP	**52 002 559** 3250SG-120-Pt1000	3/4″NPT insertion or submersion*** / PVDF / 87psi (6 bar) at 20 °C & 15 psi (16 bar) at 100 °C	**52 401 520**
pH, HF-Resistant	See housing limits	PG13.5 / glass/ VP	**52 005 353** 4252-120-Pt1000-VP		
ORP, general purpose & moderately pure water	0-100 °C 36psi (2.5 bar)	PG13.5 / glass & Pt / S8	**10 505 3339** Pt4805-DPA-S8-120	1″ weld tee / PVC / 50psi (3.5 bar) at 60 °C	**41 722 3001**
ORP, general purpose,	See housing	PG13.5 / glass	**10 505 3288**		
pH, general purpose high chemical resistance	0-100 °C 100psi (7 bar) at 65 °C & 50psi (3.5 bar) at 100 °C	1″ NPT insertion or 1″ NPT submersion / PVDF & glass / VP	**41 453 3102** 4501-VP-Pt1000-SG	user's 1-1/2″ tee and reducing bushing for insertion, or 1″ coupling & pipe for submersion	**none required**
pH, Retractable	See housing limits	PG 13.5 retractable / Glass / VP	**52 002 147** 4250-225-Pt1000	Retractable 1-1/2″ NPT / CPVC / 75psi (5 bar), 80 °C	**1000-40**
				Retractable 1-1/2″ NPT / PVDF / 75psi (5 bar), 100 °C	**1000-41**
ORP, Retractable	See housing limits	PG 13.5 retractable / Glass & Pt / S8	**10 505 3255** Pt4805-DXK-S8-225	Retractable 1″ NPT / 316SS / 100psi (7 bar), 100 °C	**1000-42**

** For use with moderately pure waters (conductivity >5 µS/cm) use 53 300 021 housing in 3/4″ NPT earth-grounded metal pipe tee with flow <100 mL/min and discharge to open drain. For higher purity and/or higher accuracy in pure water see the pHure Sensor, pages 6-7.

*** For insertion in plastic pipe, use 3/4 x 1″ reducing bushing and 1″ pipe tee. For submersion w/plastic pipe, use 3/4 x 1″ reducing coupling and 1″ pipe.

Preamp (3)

Connector	Cable Length	Part No.
	pH	
VP	3 ft (1 m)	**1200-21**
VP	10 ft (3 m)	**1200-22**
VP	16 ft (5 m)	**1200-23**
VP	33 ft (10 m)	**1200-24**
	ORP	
AS9	3 ft (1 m)	**1200-25**
AS9	10 ft (3 m)	**1200-26**
AS9	16 ft (5 m)	**1200-27**
AS9	33 ft (10 m)	**1200-28**

AS9 preamp connector mates with S8 electrode connector.

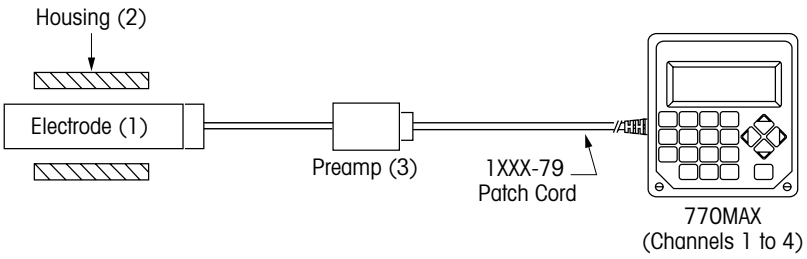

* For an overview of Smart Sensors, see the last page.

770MAX pH and ORP Sensors

Electrodes

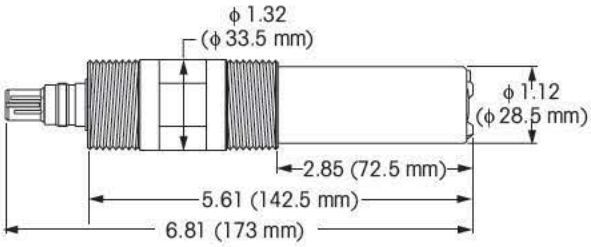

41 453 3102 Electrode

Housings

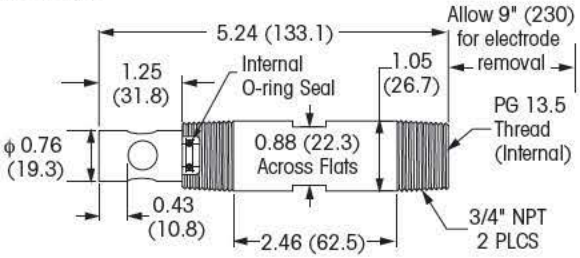

53 300 021 & 52 401 520

53 300 021

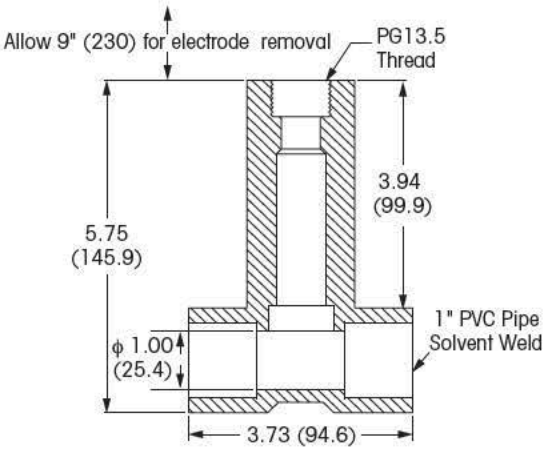

41 722 3001

41 722 3001

Dimensions: inches (mm)

Retractable Housings

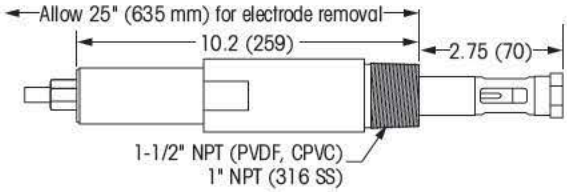

1000-4X

1000-41

Preamp

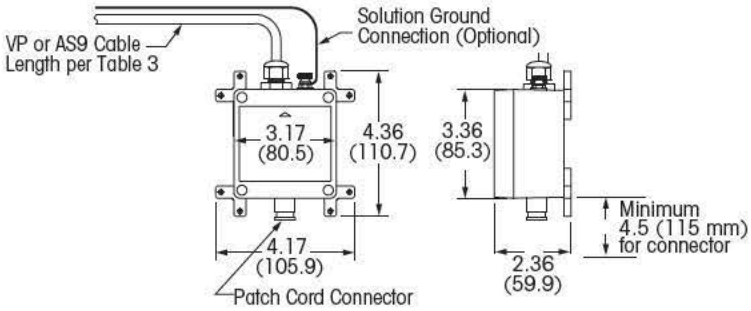

1200-2X

1200-21

Dimensions: inches (mm)

770MAX pHure Sensor ™

Applications for pure water pH measurement

- Reverse osmosis - pH adjustment of clean recycle water or between membranes in two pass systems to optimize rejection rates
- Power plant cycle chemistry - monitoring and controlling pH levels to comply with guidelines and minimize corrosion and scaling

Background

pH measurement in low conductivity waters requires special precautions. It must be made on a side-stream sample in a closed, metal, flow-through chamber with low flowrate and discharge to open drain. This assures a sample uncontaminated by carbon dioxide from the air, minimal, constant sample pressure at the reference electrode and electrical shielding to promote stability. The sample line should be short and small in diameter to minimize sample delays and to minimize waste of pure water. Additional stability is obtained with a dual high impedance measuring circuit that includes a solution ground.

Key to pure water pH measurements has been the use of a flowing junction type of reference electrode which forces electrolyte through the reference junction to provide the same conditions in various samples. The flowing junction produces nearly the same potential in pure water as in the much more conductive calibrating buffer solutions. However, a flowing junction requires some form of electrolyte reservoir that can make installation, service and calibration more cumbersome and increases cost.

Description

The Mettler-Toledo Thornton pHure Sensor™ uses a special internally-pressurized gel electrolyte reference electrode to produce similar results to a flowing junction but with much more convenient installation and maintenance. The electrode also includes a low resistance pH glass membrane, an integral, fast-responding RTD, and VP connection. The mating preamplifier provides a dual high input impedance measuring circuit with solution ground to maximize stability. The flow housing provides a controlled flow path with minimum volume to encourage power plant corrosion particles to flush through instead of accumulating as with a large flow bowl.

All components of the pHure Sensor™ have been optimized for performance and value and conform to ASTM Standard D5128. Various lengths of preamp cable and patch cord (ordered separately) are available to provide flexibility in locating the preamp.

770MAX pHure Sensor™

pHure Sensor ™ Features

Specifications

Wetted materials:	316 SS, glass, silicone rubber
Process connections:	1/4″ NPTF in/out
Flow housing volume:	5 mL with electrode in place
Maximum pressure:	atmospheric pressure for optimum stability; operational 0-35 psig (0-2.5 bar); can safely withstand 100 psig (7 bar)
Sample temperature:	32 - 176 °F (0 - 80 °C), short term to 212 °F (100 °C)
Sample pH:	1 - 11
Sample flowrate:	50 - 150 mL/min
Sample conductivity:	>0.8 µS/cm for highest accuracy
Preamplifier enclosure:	ABS, sealed
Preamp connections:	VP cable to sensor, included, length dependent on part number; standard patch cord to instrument, ordered separately.
Components included:	52 002 447 combination pH electrode, 02385 flow housing & 1200-2X preamp with VP cable. Order patch cord separately.

Description	Part No.
pHure Sensor™ with 3 ft (1 m) VP cable	**333-211**
pHure Sensor™ with 10 ft (3 m) VP cable	**333-212**
pHure Sensor™ with 16 ft (5 m) VP cable	**333-213**
pHure Sensor™ with 33 ft (10 m) VP cable	**333-214**
Replacement combination electrode with RTD	**52 002 447**

pHure Sensor ™ Dimensions

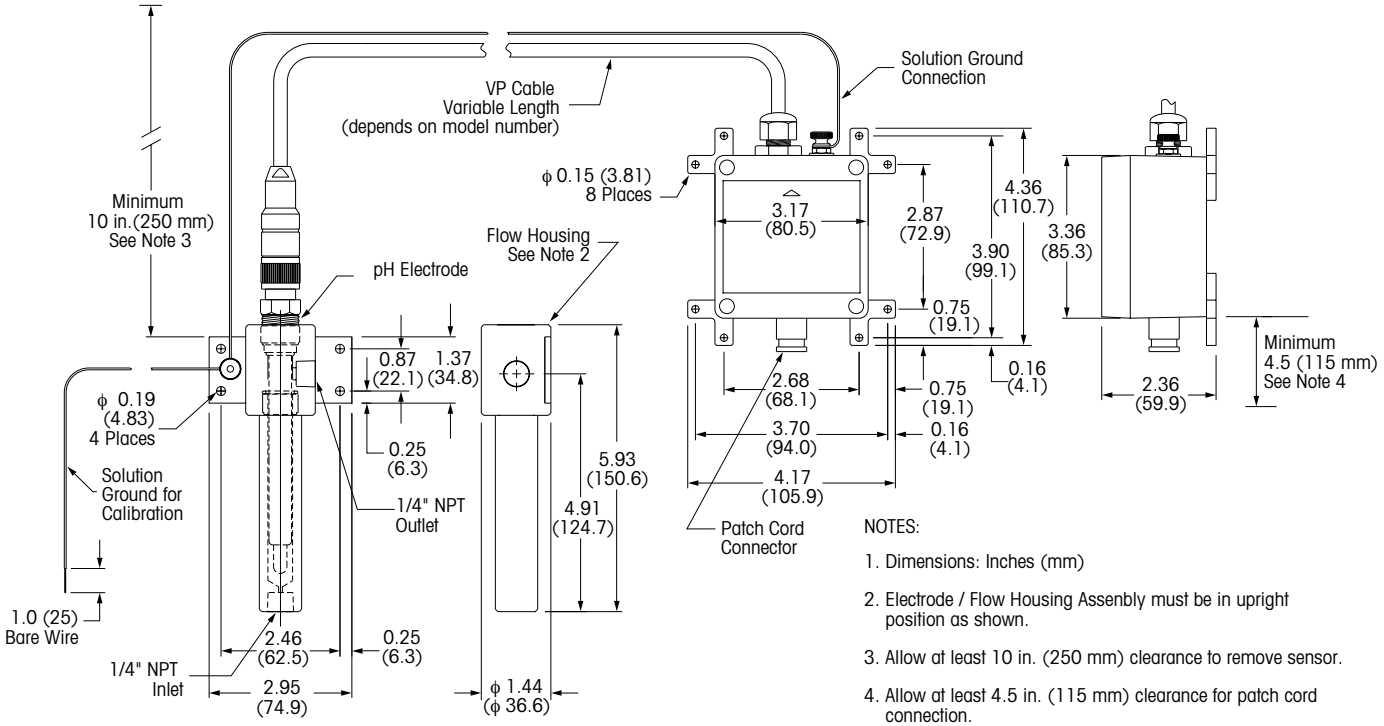

NOTES:

1. Dimensions: Inches (mm)
2. Electrode / Flow Housing Assenbly must be in upright position as shown.
3. Allow at least 10 in. (250 mm) clearance to remove sensor.
4. Allow at least 4.5 in. (115 mm) clearance for patch cord connection.
5. Orient preamplifier box with VP cable at top. Mouting feet are removable.

770MAX Dissolved Ozone Sensor

Reliable, accurate ozone measurement

Thornton's highly reliable dissolved ozone measurement capability uses a proven sensor design with rapid and accurate response to ozone concentrations. At the low end, its excellent sensitivity gives positive detection of zero ozone after destruction by UV light.

The polarographic probe uses a gas-permeable membrane through which ozone passes to produce an electrochemical reaction and current flow in direct proportion. The membrane is reinforced silicone for exceptional durability. Behind the membrane is the platinum cathode where ozone reacts to produce the measurement signal. The electrochemical reaction is completed at the silver anode. Full temperature compensation accounts for effects of both membrane permeability and solubility of ozone in water.

The probe design includes a membrane cartridge which allows exceptionally easy replacement of electrolyte and membrane when necessary. The probe uses a VP electrical connector and an o-ring seal to the flow-through housing for easy installation and removal.

Features

- Rapid, accurate response
- Positive zero detection
- Low maintenance with drop-in modular membrane
- Additional parameters available with either Thornton 770MAX or 2000 Instruments

Applications

Pharmaceutical water systems can assure complete sanitization by controlling ozonation based on an ozone measurement downstream of the storage tank. To guarantee removal of all ozone downstream of UV destruction (and satisfy the 'no added substances' requirement), a second ozone measurement can confirm a zero level. When the entire distribution system is ozonated with the UV lights off, a third measurement at the return of the distribution piping can show when an adequate ozone level has been achieved throughout the loop. Thornton multiparameter instrumentation can monitor multiple points for ozone plus conductivity and TOC, with the same instrument.

Semiconductor ultrapure water ozone sanitization can be controlled by monitoring the ozone concentration downstream of the ozonator and UPW storage tank. To be sure all ozone has been decomposed after UV lights, a second ozone measurement can confirm a zero level. Thornton multiparameter capability can provide solid ppb-level ozone measurements plus simultaneous resistivity and TOC measurements in the same instrument.

Bottled Water Systems monitor ozonation levels to be sure of proper sanitization of the water, which in turn sanitizes the bottle and seal. Continuous measurement and control to proper ozone levels is a key quality practice that promotes consistent good taste and long shelf life. Thornton equipment can provide this measurement continuously at minimal cost.

Beverage Systems frequently use ozonated water in place of chemicals for the clean-in-place (CIP) operations when changing between flavors. Instead of using acids, caustic or chlorine, ozone can provide the cleaning and disinfection without risk of objectionable residuals or byproducts. Ozone monitoring and control are essential to enable repeatable CIP operations. Thornton instrumentation meets these requirements cost effectively.

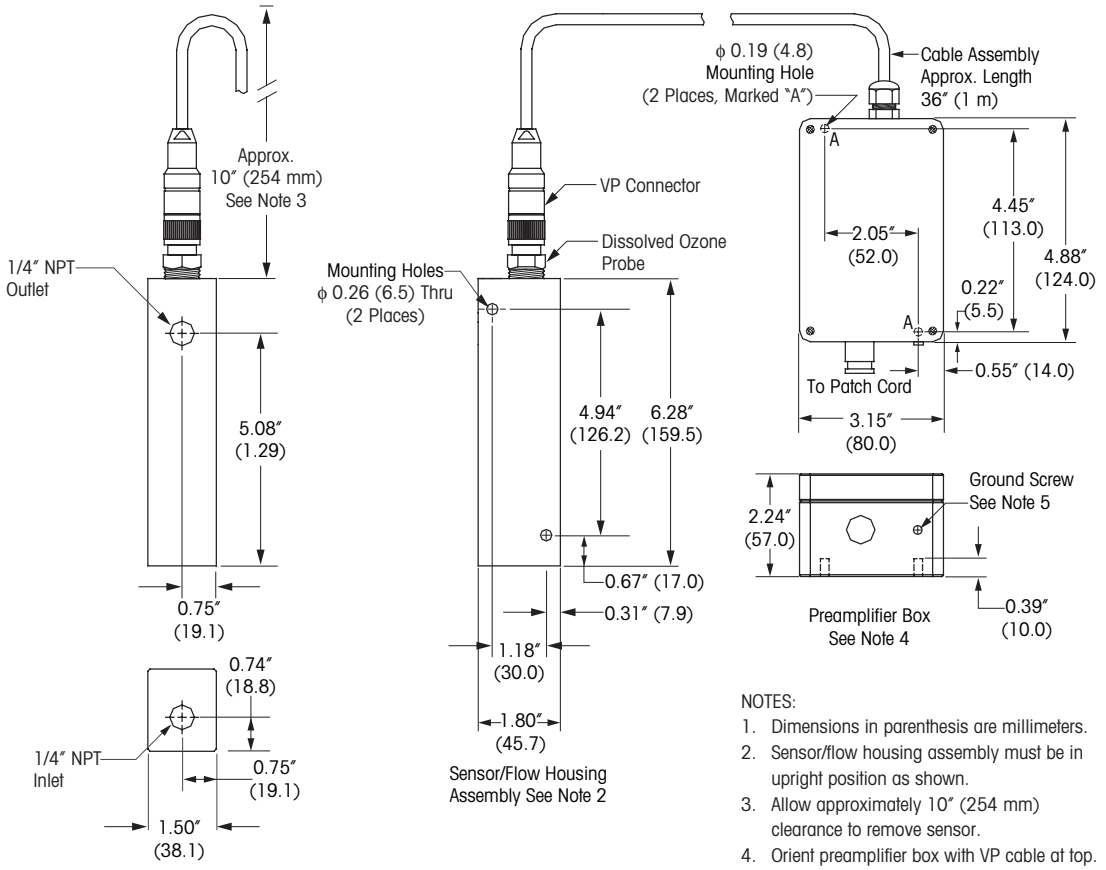

Polycarbonate flow housing shown (For SS housing dimensions, see pHure Sensor, p.7.)

NOTES:
1. Dimensions in parenthesis are millimeters.
2. Sensor/flow housing assembly must be in upright position as shown.
3. Allow approximately 10″ (254 mm) clearance to remove sensor.
4. Orient preamplifier box with VP cable at top.
5. Earth ground connection. (Refer to manual for wiring instructions.)

Specifications

Sample Flowrate:

100 - 500 mL/min in housing; 0.5-3 ft/s (0.15-1m/s) without housing

Sample Temperature:

5-50 °C (41-122 °F) for measurement, probe can withstand 100 °C (212 °F)

Sample Pressure:

Normal operation, atmospheric; can withstand 3 bar (45 psig)

Sample Connections:

1/4″ NPT

Wetted Materials:

Polycarbonate or 316 SS flow housing, 316 SS steel probe, silicone rubber

membrane & o-ring

Cable Lengths:

Description	Part No.
Dissolved Ozone Sensor for 770MAX (includes probe, preamp & polycarbonate flow housing)	**358-210**
Dissolved Ozone Sensor for 770MAX (includes probe, preamp & SS flow housing)	**358-220**
Dissolved Ozone Sensor for 770MAX (includes probe & preamp only)	**358-230**
Maintenance Kit (4 membranes & electrolyte)	**52 201 179**

770MAX CE Patch Cords

Ozone sensors used with 770MAX in Europe must use this alternate series of patch cord to meet CE electromagnetic compatibility requirements. All other installations may use standard patch cords.

Patch Cord Length ft (m)	Part No.
5 (1.6)	**1005-70**
10 (3)	**1010-70**
15 (4.5)	**1015-70**
25 (7.6)	**1025-70**
50 (15.2)	**1050-70**

Patch Cord Length ft (m)	Part No.
100 (30.5)	**1100-70**
150 (45.7)	**1115-70**
200 (61)	**1120-70**
300 (91)	**1130-70**

770MAX High Performance Dissolved Oxygen Sensor

Thornton's High Performance ppb-level dissolved oxygen measurement capability excels in the most demanding applications. Inherent in its design is a precise zero and a highly accurate response over the entire range of measurement. This allows it to perform well at any level as well as providing very fast response to changes from one level to another.

The polarographic probe uses a gas-permeable membrane through which oxygen passes to produce an electrochemical reaction and current flow in direct proportion. The membrane is stainless steel mesh-reinforced PTFE for exceptional durability. Behind that membrane is the platinum cathode where oxygen reacts to produce the measurement signal. The cathode is surrounded by a guard electrode which prevents stray oxygen from the sides of the membrane or inside of the probe from adding to the signal. The guard ring is the key to the very rapid downscale response. The electrochemical reaction is completed at the silver cathode.

Full temperature compensation accounts for effects on both membrane permeability and solubility of oxygen in water.

Features

- Very fast response
- High accuracy
- Low maintenance with drop-in modular membrane
- Excellent long-term stability

Applications

Power plant cycle chemistry monitoring of DO enables control of oxygen scavenger with phosphate, caustic or all-volatile treatment. With oxygenated treatment it can be used to regulate oxygen feed. Compliance with cycle chemistry guidelines and specifications for DO can be assured with this very accurate and responsive measuring system. Cycling plants can benefit from its rapid downscale response, assuring real-time reporting of even the fastest deoxygenation during startup.

A 770MAX can be used as a compact portable meter to verify or calibrate panel-mounted instruments. A single 770MAX can measure specific and cation conductivity, pH, dissolved oxygen and sample temperature and provide simultaneous RS232 or analog outputs for all of them.

Semiconductor ultrapure water for some processes requires low DO levels to prevent oxidation of wafer surfaces between stages. The 770MAX can provide a solid ppb-level DO measurement plus simultaneous measurements of resistivity and flow in the same instrument.

Pure water treatment systems with deaerators to produce water for the above applications can be reliably monitored with this sensor. The additional measurement channels are available for all of the other 770MAX parameters.

Sample flowrate: 50 - 1000 mL/min
Sample temperature: 0 - 60 °C (32 - 140 °F) for temperature compensation; can tolerate 100 °C
Sample pressure: 0 - 5 bar (72 psig)
Sample connections: 1/4" NPT
Wetted materials: Polyacetal flow housing, polyphenylene sulfide probe body, PTFE membrane reinforced with stainless steel and silicone rubber, Viton and silicone rubber o-rings.
Cable length: Probe to preamp, 3 ft (1 m); preamp to instrument, 1 to 300 ft (0.3 to 91 m) with patch cord ordered separately
Weight: 1 kg (2 lb) with flow housing
Response time: 98% response in 90 seconds
Operating range: 0 - 10,000 ppb (µg/L)
System accuracy: ± 1% of reading or 1 ppb, whichever is greater; ± 0.5 °C
Spare parts: Replacement electrolyte included

Description	Part No.
DO Probe, preamp & flow housing	**357-210**
Maintenance kit (electrolyte and 4 membranes)	**52 200 024**
Polarization module (for portable use)	**52 200 893**

770MAX High Performance Dissolved Oxygen Sensor Dimensions

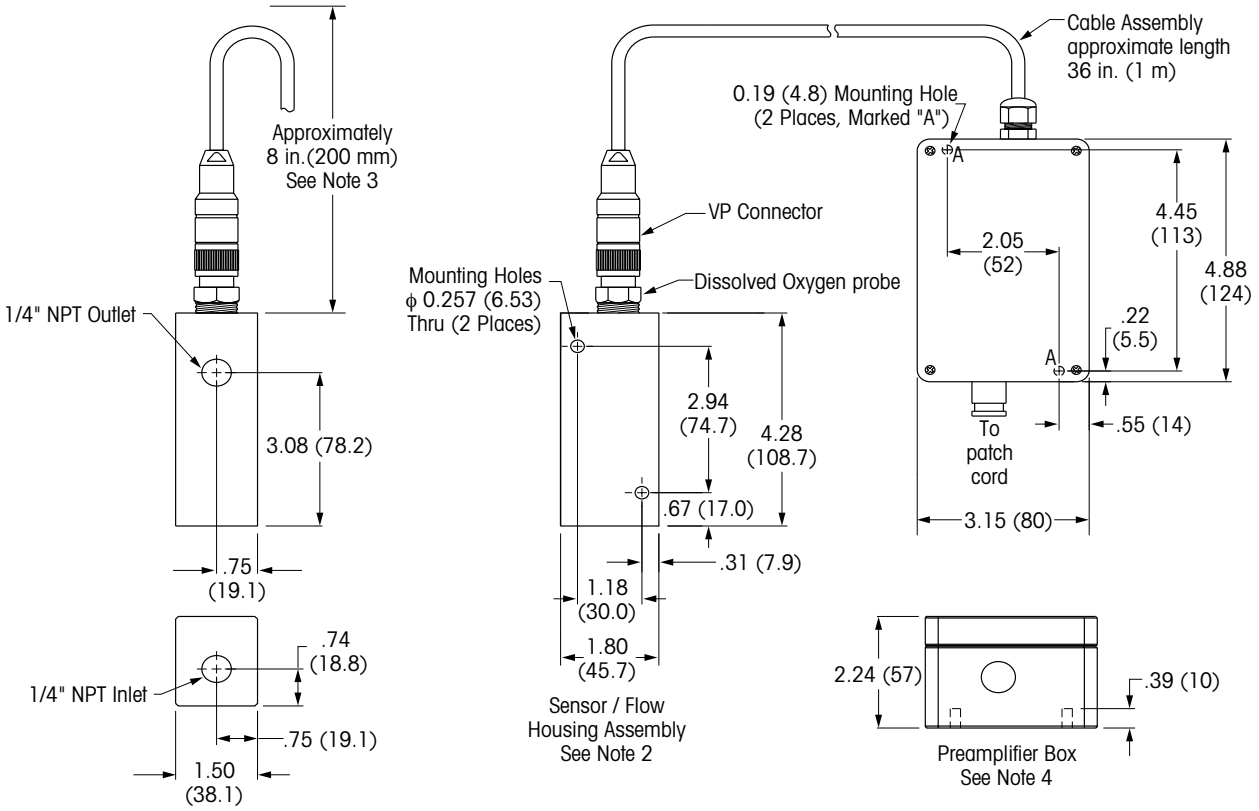

Notes:

1. Dimensions: inches (mm)
2. Sensor/Flow housing assembly must be in upright position as shown.
3. Allow approximately 8 in. (200 mm) clearance to remove sensor.
4. Orient preamplifier box with VP cable at the top.

770MAX Long-life Dissolved Oxygen Sensor

Thornton's long-life dissolved oxygen measurement capability uses an industry-proven sensor design with major improvements in longevity. An especially durable membrane and controlled internal electrochemistry allow many years of operation with no internal maintenance.

Self-polarized electrodes minimize upsets from power interruption. Full temperature compensation accounts for effects on both membrane permeability and solubility of oxygen in water.

Features

- Very low maintenance
- Excellent long-term stability
- Industry-proven sensor technology
- No interference from hydrogen in stator cooling and nuclear power applications.

Applications

Power plant cycle chemistry monitoring of DO enables control of oxygen scavenger with phosphate, caustic or all-volatile treatment. With oxygenated treatment it can be used to regulate oxygen feed. Compliance with cycle chemistry guidelines and specifications for DO can be assured with this reliable, long-term measuring system. Stator cooling water can be monitored without interference from dissolved hydrogen.

Semiconductor ultrapure water for some processes requires low DO levels to prevent oxidation of wafer surfaces between stages. The 770MAX can provide solid ppb-level DO measurements plus simultaneous measurements of other key water quality parameters in the same instrument.

Pure water treatment systems with deaerators to produce water for the above applications can be reliably monitored with the 770MAX.

Sample flowrate:	50 - 2000 mL/min
Sample temperature:	5 - 50 °C (41 - 122 °F)
Sample pressure:	Normal operation, atmospheric; can withstand 3 bar (45 psig)
Sample connections:	1/8" NPT
Wetted materials:	Polyacetal flow chamber, 316 stainless steel and polyacetal probe, HDPE membrane
Cable length:	Probe to preamp, 1.5 ft (0.5 m); preamp to instrument, 5 to 200 ft (1.6 to 61 m) with patch cord ordered separately
Weight:	1.5 kg (3 lb) with flow chamber
Response time:	Within range, 20 seconds for 90% response; from air calibration, dependent on air exposure time
Operating range:	0 - 10,000 ppb (µg/L) with auto-ranging
System accuracy:	± 2% reading or 1 ppb, whichever is greater; ± 0.5 °C
Spare parts:	Maintenance kit of 7 membranes, and replacement electrolyte, Part No. 91008 included.

Description	Part No.
ppb DO probe/preamp & flow chamber	**357-110**

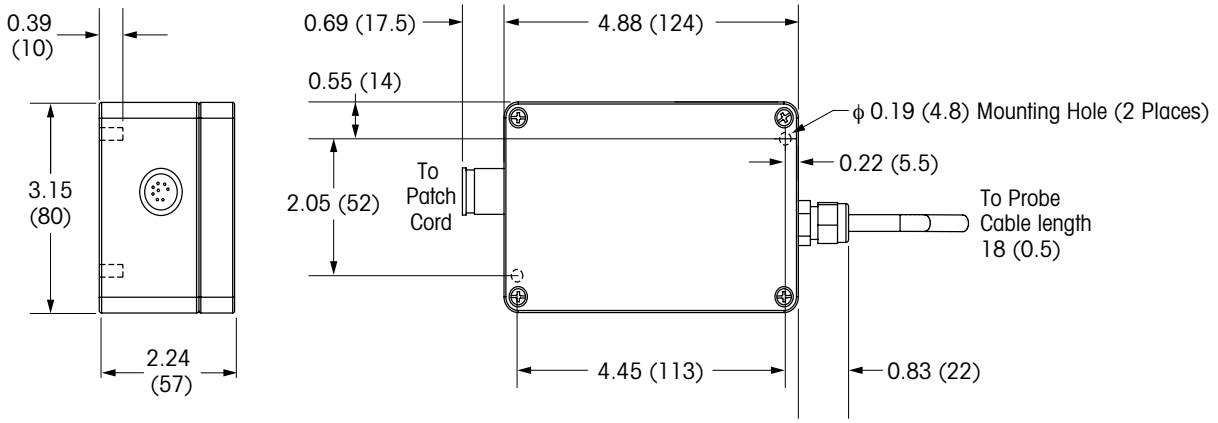

Orient preamp box with probe cable at top.

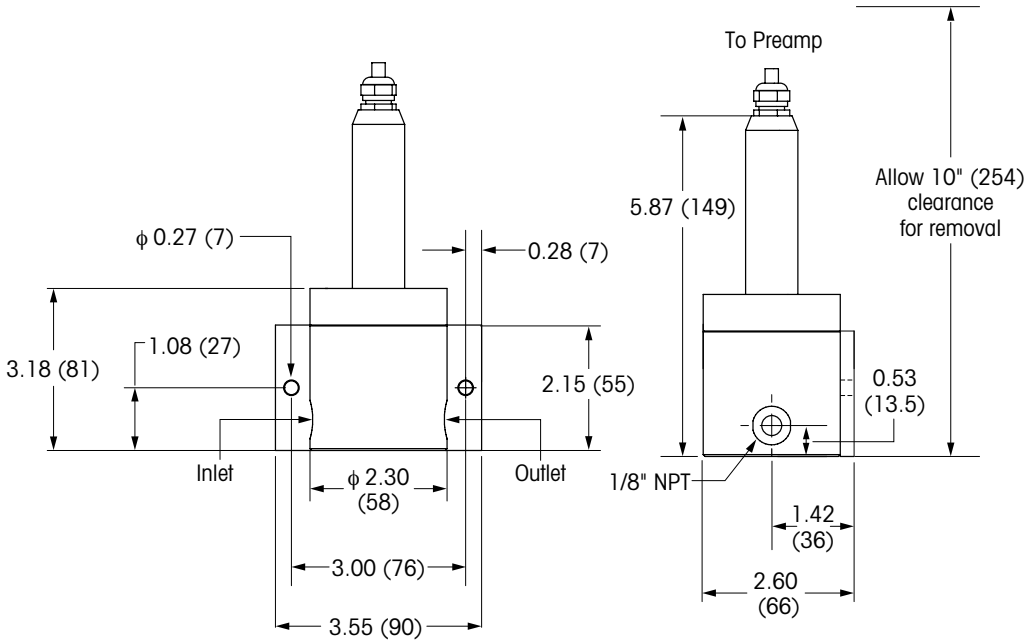

Dimensions: inches (mm)

770MAX Tank Level, Pressure & Vacuum Sensors

Provide compact pressure and level sensing.

Process connect: 1/4″ NPTM
Cable: 5 ft (1.5 m), with Smart connector
Patch cord length: 150 ft (45.6 m) maximum
Accuracy: ±1% FS except 332-931 which is ±0.5% FS
Temperature range: 30 to 200 °F (-1 to 93 °C)
Temperature compensated range: 30 to 130 °F (-1 to 54 °C)
Certification: Certificate of Conformance included

Range	Wetted Material	Part No.
Tank Level		
0-6 psig (0-0.4 bar), 0-166 in (0-4.2 m)	316L SS	**332-931**
0-15 psig (0-1 bar), 0-416 in (0-10.5 m)	316L SS	**332-531**
Pressure		
0-100 psis (0-6.9 bar)	15-5 PH SS	**332-131**
0-200 psis (0-13.8 bar)	15-5 PH SS	**332-231**
0-500 psis (0-34.5 bar)	15-5 PH SS	**332-331**
0-1000 psis (0-69 bar)	15-5 PH SS	**332-431**
Vacuum		
0-15 psia (0-1 bar a)	316L SS	**332-031**

psis units identify a sealed sensor that measures gauge pressure against a constant reference of 14.7 psia. The seal protects sensitive parts of the transducer from airborne contaminants.

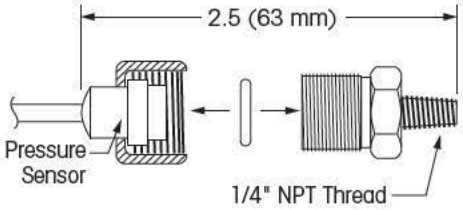

Temperature Sensors

Provide temperature sensing independent of conductivity or pH sensor. Penetration depth is adjustable at installation.

Process connection: 1/4″ NPTM, with 02112 Fitting
Wetted material: 316 SS
Range: -40 to 284 °F (-40 to 140 °C)
Pressure: 200 psig (14 bar)
Cable: 5 ft (1.5 m), with Smart connector
Accuracy: ±0.1°C
Certification: Certificate of Accuracy included

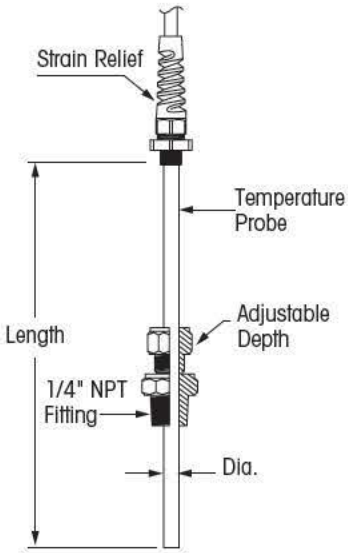

Description	Material	Length	Dia.	Part No.
1000 Ω Platinum RTD	316L SS	2″ (51 mm)	3/16″ (4.8 mm)	**231-321**
1000 Ω Platinum RTD	316L SS	6.8″ (173 mm)	1/4″ (6.4 mm)	**231-311**
1/4″ fitting for 231-311	Stainless Steel	-	-	**02112**

770MAX Accessories

Description	Part Number	Description	Part Number
Patch Cord with connector at both ends, for 770MAX and Smart Sensors. Observe length limitations of pressure and level sensors.			
1 ft (0.3 m) cord	**1001-79**	50 ft (15.2 m) cord	**1050-79**
5 ft (1.5 m) cord	**1005-79**	100 ft (30.5 m) cord	**1100-79**
10 ft (3 m) cord	**1010-79**	150 ft (45.6 m) cord	**1115-79**
15 ft (4.5 m) cord	**1015-79**	200 ft (61 m) cord	**1120-79**
25 ft (7.6 m) cord	**1025-79**	300 ft (91 m) cord	**1130-79**

770MAX Smart Signal Adapters

Smart Signal Adapters

Provide an input for non-smart analog, conductivity, or frequency signals to the 770MAX. These signals can then be handled like any other channel, allowing one or more measurements to be assigned to that channel. Adapters may also be used for 770MAX accuracy verification using standards lab test equipment (if metrology protocol requires back up to the 1875 Smart Calibrator).

Voltage and current signals can be scaled in the 770MAX for custom ranges in 770MAX engineering units available for other sensors. For example, a special flow transmitter 4-20 mA signal may be connected to the adapter. On the 770MAX, its measurement display can be scaled in units of GPM, LPM, m^3/hr, or ft/sec. A second measurement for total flow could have units of gallons, liters or $meters^3$.

To accommodate measurement of the electrical parameters of continuous electrodeionization systems, displayed units of volts and amps are also available. Frequency signals are typically those of a pulse-type flow sensor.

Input connection: Cable with tinned lead pair (conductivity has 4-wire conductivity & 4-wire temperature input.)
Output connection: 770MAX Smart connector to interface with 1XXX-79 series patch cords
Signal requirements: Isolated from earth ground, externally powered (except 1000-68 & 1000-82)
Frequency signal: TTL, 0.5 - 4000 Hz; Amplitude - Low <2V (-5 V min), High >3V (12 V max)

Input Signal Range	Input Resistance	Cable Length	Part No.
0 - 100 mVDC	-	5 ft (1.5 m)	**1000-81**
0 - 1 VDC	-	5 ft (1.5 m)	**1000-79**
0 - 10 VDC	-	5 ft (1.5 m)	**1000-99**
4 - 20 mADC, Passive	100 ohms	5 ft (1.5 m)	**1000-90**
4-20 mADC, 24V loop power from adapter	100 ohms	5 ft (1.5 m)	**1000-68**
Conductivity Sensor & Pt1000 RTD	-	3 ft (1 m)	**1000-82**
Frequency (Flow)	-	3 ft (1 m)	**1000-83**

770MAX software version 2.4 (July 2002) or later required.

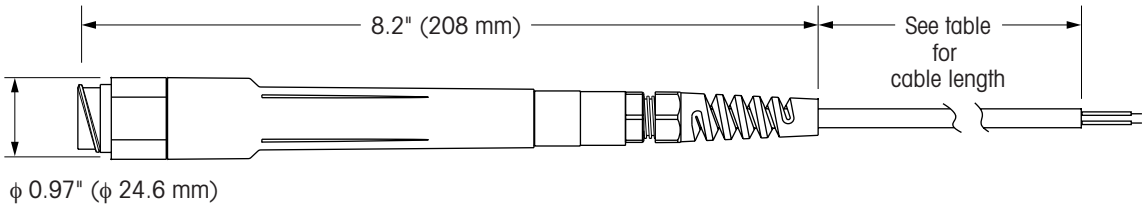

770MAX Sensor Selection

Thornton smart sensors are a key part of the 770MAX Multiparameter Analyzer/ Transmitter measuring system. Sensors are available for pH, ORP, dissolved oxygen, flow, pressure, tank level and temperature as well as conductivity/resistivity (covered in separate data sheet ML0072). Each sensor includes data stored in its non-volatile memory which is communicated to the instrument as soon as it is connected. This data includes measurement identification, calibration constants, date of last calibration, serial number, etc., providing especially fast, simple and reliable startup and documentation. In addition, all wiring is conveniently handled through connectors.

Sensor Selection

Thornton offers a variety of sensors to accommodate most applications. Use the following criteria to select the most appropriate sensor for your installation. (For sanitary sensors with Tri-Clamp connections, see data sheet ML0073.)

- Measurement range
- Pipe connection type and size
- Pressure
- Temperature and chemical compatibility including exposure to steam and/or chemical cleaning

Smart Sensor Wiring

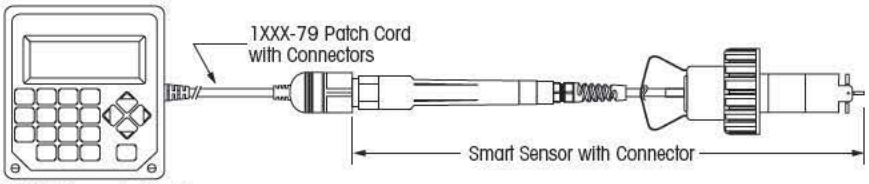

770MAX (Channels 1 to 4)

Smart Sensor and Patch Cord Dimensions

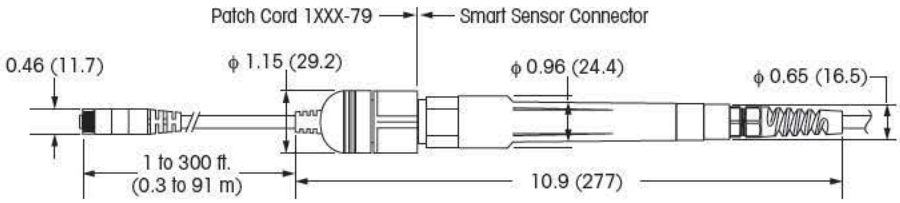

Dimensions: inches (mm), except where noted otherwise

www.mt.com/thornton

Visit for more information

Mettler-Toledo Thornton, Inc.
36 Middlesex Turnpike, Bedford, MA 01730 USA
Tel. +1-781-301-8600
Toll-Free: 1-800-510-PURE (US and Canada only)
Fax +1-781-301-8701
thornton.info@mt.com

Quality certificate.
Development, production and testing to ISO 9001.

A certified ServiceXXL provider.

ML0074 Rev.H 07/12