Reference Manual

Precision and Analytical Balances

ML-T

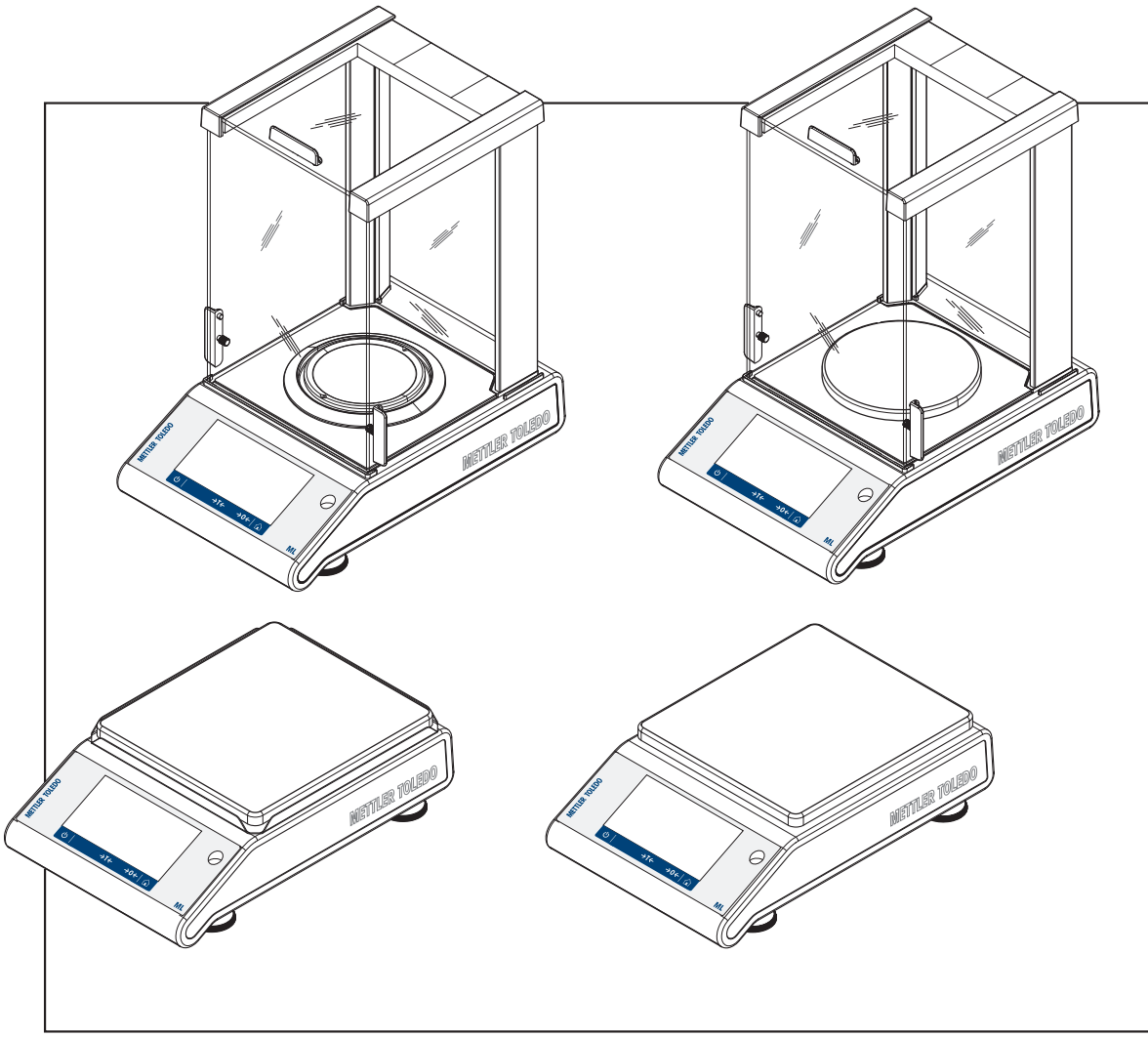

METTLER TOLEDO

Table of Contents

1 Introduction 5
1.1 Further documents and information 5
1.2 Explanation of conventions and symbols used 5
1.3 Acronyms and abbreviations 6
1.4 Compliance information 6

2 Safety Information 7
2.1 Definitions of signal warnings and warning symbols 7
2.2 Product specific safety notes 7

3 Design and Function 9
3.1 Overview balance 9
3.2 Overview peripheral devices 10
3.3 Overview type plate 10
3.4 Overview operation keys 11
3.5 User Interface 11
3.5.1 Main settings and activities at a glance 12
3.5.2 Application home screen 13
3.5.3 Entering characters and numbers 14
3.5.4 Lists and tables 15
3.5.5 Detailed balance information 15
3.5.6 Basic navigation 16
3.5.6.1 Touch screen navigation 16

4 Installation and Putting into Operation 18
4.1 Selecting the location 18
4.2 Unpacking 18
4.3 Scope of delivery 19
4.4 Assembling the balance 19
4.5 Putting into operation 21
4.5.1 Connecting the balance 21
4.5.2 Battery operation 21
4.5.3 Switching on the balance 23
4.5.4 Changing the date and time 23
4.5.5 Leveling the balance 24
4.5.5.1 Leveling the balance using the leveling assistant 24
4.5.6 Adjusting the balance 25
4.6 Performing a simple weighing 25
4.7 Transporting, packaging and storage 27
4.7.1 Transporting over short distances 28
4.7.2 Transporting over long distances 28
4.7.3 Packaging and storage 28
4.8 Weighing below the balance 28

5 General Settings 30
5.1 Quick settings 30
5.1.1 Brightness 30
5.1.2 Sound 31
5.1.3 Language 31
5.1.4 Glove mode 31
5.1.5 Quick adjustment 31
5.1.6 Date/Time widget 32
5.1.7 Leveling assistant 32
5.1.8 Change password 32
5.2 General configuration 33

5.2.1 Weighing options ... 33
5.2.1.1 Weighing mode ... 33
5.2.1.2 Environment ... 33
5.2.1.3 Autozero ... 33
5.2.1.4 Auto tare ... 34
5.2.1.5 Auto clear tare ... 34
5.2.1.6 MinWeigh ... 34
5.2.1.7 Recall ... 35
5.2.2 Publishing ... 35
5.2.2.1 Print and export report ... 35
5.2.2.2 Send data ... 38
5.2.2.3 Advanced options ... 39
5.2.3 Devices ... 39
5.2.4 Network and Bluetooth ... 43
5.2.5 System settings ... 44
5.2.6 User management ... 47
5.2.6.1 General ... 47
5.2.6.2 Groups ... 48
5.2.6.3 Users ... 49
5.2.6.4 User login / lock / logout ... 51
5.2.7 ISO-Log ... 53

6 Application Settings 55
6.1 Main configuration ... 55
6.2 Reports configuration ... 55
6.2.1 Working with IDs ... 56
6.2.2 Defining an ID ... 57
6.2.3 Workflow handling options ... 57
6.3 Statistics ... 58

7 Activities 60
7.1 Activities - Weighing applications ... 60
7.1.1 Weighing ... 61
7.1.2 Counting ... 63
7.1.2.1 Counting - Main configuration ... 63
7.1.2.2 Defining reference piece weight in standard mode ... 64
7.1.2.3 Defining reference piece weight in advanced mode ... 65
7.1.3 Check weighing ... 67
7.1.3.1 Check Weighing - Main configurations ... 67
7.1.3.2 Before performing check weighing ... 68
7.1.3.3 Performing check weighing ... 69
7.1.4 Formulation ... 70
7.1.5 Totaling ... 72
7.1.6 Back-weighing ... 75
7.1.7 Dynamic weighing ... 78
7.1.8 Percent weighing ... 80
7.1.9 Density ... 81
7.1.10 Factor weighing ... 83
7.2 Activities - Adjustments and tests ... 84
7.2.1 Fully automatic adjustment (FACT) ... 84
7.2.2 Internal adjustment ... 84
7.2.3 External adjustment ... 85
7.2.4 Fine adjustment (model-dependent) ... 85
7.2.5 Touch screen adjustment ... 86
7.2.6 Level center adjustment ... 86
7.2.7 Routine test ... 86
7.2.8 Repeatability test ... 87

8 Communication with Peripheral Devices 89
8.1 USB - interface and installation 89
8.2 Send weight value via USB or RS232C to a PC using PC-Direct 90
8.2.1 PC-Direct via USB 90
8.2.2 PC-Direct via RS232C 91
8.2.2.1 Installing SerialPortToKeyboard software 91
8.2.2.2 Settings on the balance 91
8.3 Collecting measurement results and balance details with EasyDirect Balance 93
8.4 Connect via USB to a printer and print weighing results 95
8.5 Connect via LAN to a P-50 printer and print weighing results 96
8.6 Connect via Bluetooth to a P-50 printer and print weighing results 97
8.7 Connect a USB barcode reader and scan the barcode 98
8.8 Connect a USB keyboard 99
8.9 Export measurement results to a USB memory stick 100
8.10 Export XML files to a FTP server and import them with the help of a XSD file 101
8.11 Communication with MT-SICS commands via LAN 103

9 Maintenance 104
9.1 Maintenance tasks 104
9.2 Cleaning 104
9.2.1 Cleaning the glass draft shield (0.1 mg and 1 mg models) 104
9.2.2 Cleaning the balance 108
9.2.3 Putting into operation after cleaning 109

10 Troubleshooting 110
10.1 Error messages 110
10.2 Error symptoms 112
10.3 Status messages/Status icons 113
10.4 Putting into operation after fixing an error 115

11 Technical Data 116
11.1 General data 116
11.2 Model-specific data 118
11.2.1 Analytical balances with a readability of 0.1 mg with draft shield 118
11.2.2 Precision balances with a readability of 1 mg with draft shield 120
11.2.3 Precision balances with a readability of 10 mg 121
11.2.4 Precision balances with a readability of 100 mg 123
11.3 Dimensions 124
11.3.1 Balances with a readability of 0.1 mg with draft shield (235 mm) 124
11.3.2 Balances with a readability of 1 mg with draft shield (235 mm) 125
11.3.3 Balances with a readability of 10 mg with square weighing pan and draft shield element 126
11.3.4 Balances with a readability of 100 mg with square weighing pan 127
11.4 Interface specifications 128
11.4.1 RS232C interface 128
11.4.2 USB host 129
11.4.3 USB device 129
11.4.4 Ethernet 129
11.4.5 Wi-Fi and Bluetooth 130
11.4.6 MT-SICS interface commands and functions 130

12 Accessories and Spare Parts 131
12.1 Accessories 131
12.2 Spare parts 136

13 Disposal **140**

14 Appendix **141**
14.1 Compliance information..... 141

Index **143**

1 Introduction

Thank you for choosing a METTLER TOLEDO balance. The balance combines high performance with ease of use.

This document is based on the software version V 4.20.

EULA

The software in this product is licensed under the METTLER TOLEDO End User License Agreement (EULA) for Software. ▶ www.mt.com/EULA

When using this product you agree to the terms of the EULA.

1.1 Further documents and information

▶ www.mt.com/mlt-analytical

▶ www.mt.com/mlt-precision

This document is available in other languages online.

▶ www.mt.com/ml-t-RM

Search for software downloads ▶ www.mt.com/labweighing-software-download

Search for documents ▶ www.mt.com/library

For further questions, please contact your authorized METTLER TOLEDO dealer or service representative.

▶ www.mt.com/contact

1.2 Explanation of conventions and symbols used

Conventions and symbols

Key and/or button designations and display texts are shown in graphic or bold text, e.g., **Language**.

Note For useful information about the product.

Refers to an external document.

Elements of instructions

In this manual, step-by-step instructions are presented as follows. The action steps are numbered and can contain prerequisites, intermediate results and results, as shown in the example. Sequences with less than two steps are not numbered.

- Prerequisites that must be fulfilled before the individual steps can be executed.

1 Step 1

  ➡ Intermediate result

2 Step 2

➡ Result

1.3 Acronyms and abbreviations

Original term	Explanation
ASTM	American Society for Testing and Materials
EMC	Electromagnetic Compatibility
FACT	Fully automatic time- and temperature-controlled internal adjustment
FCC	Federal Communications Commission
GWP	Good Weighing Practice
ID	Identification
LPS	Limited Power Source
MT-SICS	METTLER TOLEDO Standard Interface Command Set
OIML	Organisation Internationale de Métrologie Légale (International Organization of Legal Metrology)
RM	Reference Manual
SNR	Serial Number
SOP	Standard Operating Procedure
UM	User Manual
USB	Universal Serial Bus
USP	United States Pharmacopeia

1.4 Compliance information

The compliance information related to this product can be found in appendix.

2 Safety Information

Two documents named "User Manual" and "Reference Manual" are available for this instrument.

- The User Manual is printed and delivered with the instrument.
- The electronic Reference Manual contains a full description of the instrument and its use.
- Keep both documents for future reference.
- Include both documents if you transfer the instrument to other parties.

Only use the instrument according to the User Manual and the Reference Manual. If you do not use the instrument according to these documents or if the instrument is modified, the safety of the instrument may be impaired and Mettler-Toledo GmbH assumes no liability.

2.1 Definitions of signal warnings and warning symbols

Safety notes contain important information on safety issues. Ignoring the safety notes may lead to personal injury, damage to the instrument, malfunctions and false results. Safety notes are marked with the following signal words and warning symbols:

Signal words

DANGER	A hazardous situation with high risk, resulting in death or severe injury if not avoided.
WARNING	A hazardous situation with medium risk, possibly resulting in death or severe injury if not avoided.
CAUTION	A hazardous situation with low risk, resulting in minor or moderate injury if not avoided.
NOTICE	A hazardous situation with low risk, resulting in damage to the instrument, other material damage, malfunctions and erroneous results, or loss of data.

Warning symbols

General hazard: read the User Manual or the Reference Manual for information about the hazards and the resulting measures.

Electrical shock

Notice

2.2 Product specific safety notes

Intended use

This instrument is designed to be used by trained staff. The instrument is intended for weighing purposes.

Any other type of use and operation beyond the limits of use stated by Mettler-Toledo GmbH without consent from Mettler-Toledo GmbH is considered as not intended.

Responsibilities of the instrument owner

The instrument owner is the person holding the legal title to the instrument and who uses the instrument or authorizes any person to use it, or the person who is deemed by law to be the operator of the instrument. The instrument owner is responsible for the safety of all users of the instrument and third parties.

Mettler-Toledo GmbH assumes that the instrument owner trains users to safely use the instrument in their workplace and deal with potential hazards. Mettler-Toledo GmbH assumes that the instrument owner provides the necessary protective gear.

⚠ WARNING

Death or serious injury due to electric shock

Contact with parts that carry a live current can lead to death or injury.

1 Only use the METTLER TOLEDO power cable and AC/DC adapter designed for your instrument.
2 Connect the power cable to a grounded power outlet.
3 Keep all electrical cables and connections away from liquids and moisture.
4 Check the cables and the power plug for damage and replace them if damaged.

NOTICE

Damage to the instrument or malfunction due to the use of unsuitable parts

– Only use parts from METTLER TOLEDO that are intended to be used with your instrument.

3 Design and Function

3.1 Overview balance

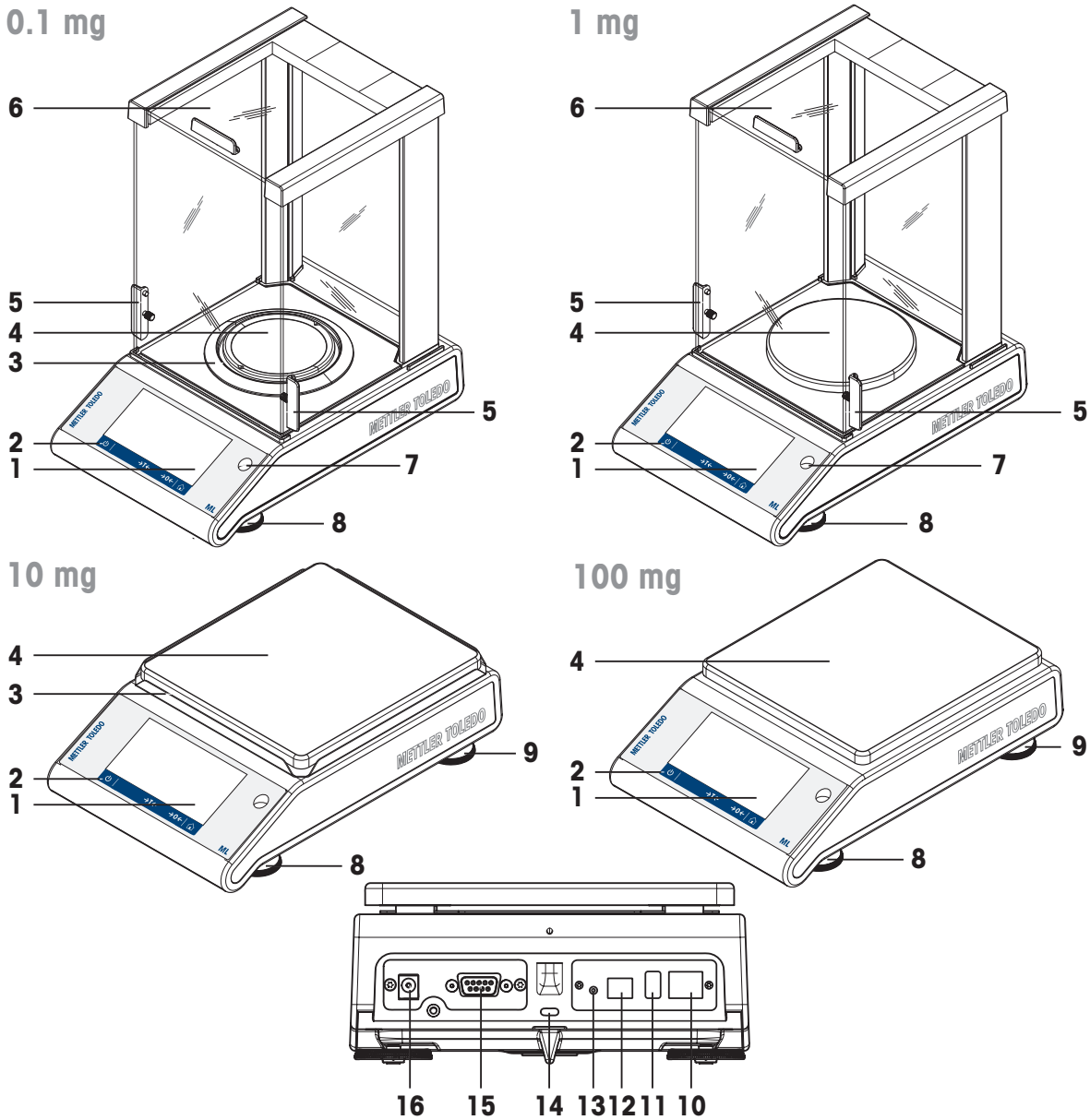

1	Capacitive color TFT touch screen	**2**	Operating keys
3	Draft shield element	**4**	Weighing pan
5	Handle for operation of the draft shield door	**6**	Glass draft shield
7	Level indicator	**8**	Leveling feet
9	Safety feet (10 mg and 100 mg models)	**10**	Ethernet port
11	USB host port	**12**	USB device port
13	Bat.ON to switch the balance on during battery operation	**14**	Kensington slot for anti-theft purposes
15	RS232C serial interface	**16**	Socket for AC/DC adapter

3.2 Overview peripheral devices

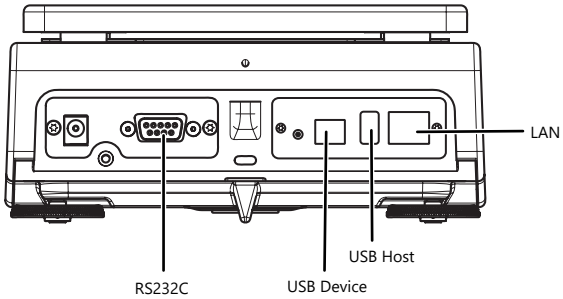

Interfaces and possible connectivity of peripheral devices:

USB DEVICE	RS232C	USB HOST	LAN
PC	RS-P20 / P-50 printer	Barcode reader	LAN
	Barcode reader	USB-P25 printer	P-50 printer
	RS 2nd display	P-50 printer	
	PC	USB memory stick	
		USB Keyboard	
		Wireless dongle MTICWD-100	

For more information about peripheral devices, see [Accessories ▸ Page 131].

3.3 Overview type plate

The balance type plate is located at the side of the balance and contains the following information (example illustration):

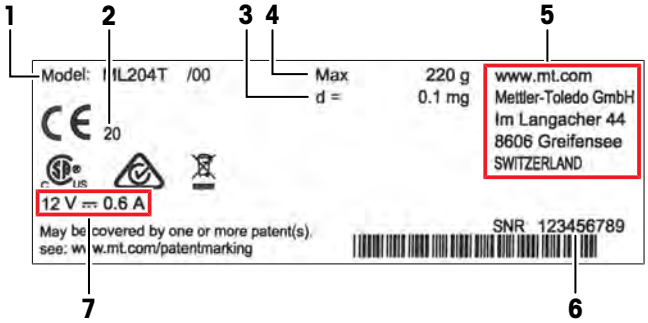

1	Model designation	**2**	Year of manufacture
3	Readability	**4**	Maximum capacity
5	Manufacturer	**6**	Serial number (SNR)
7	Power supply		

3.4 Overview operation keys

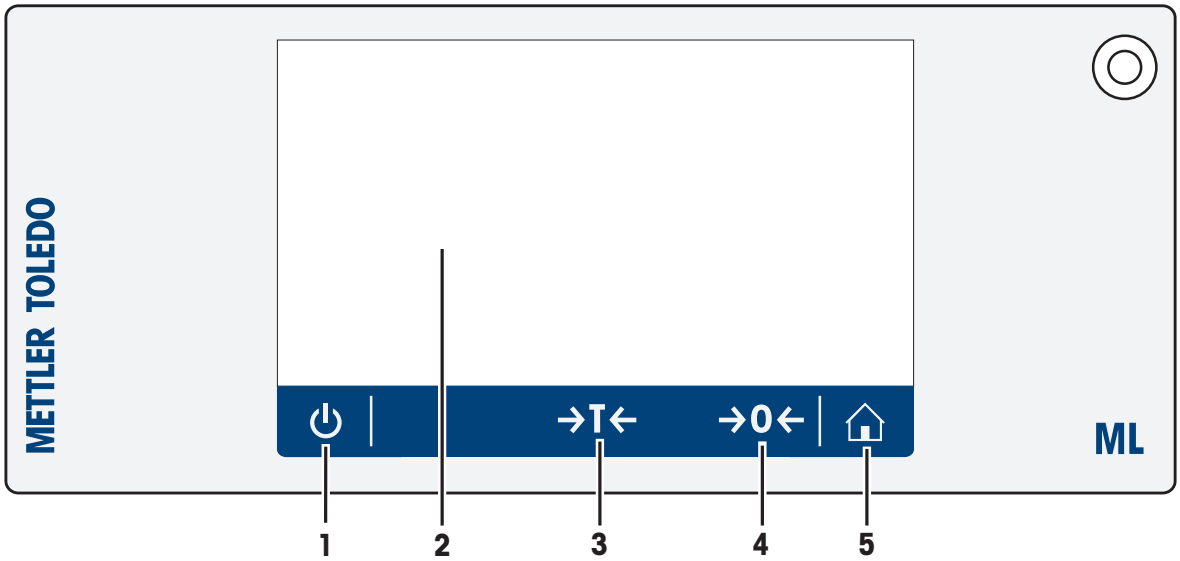

	Key	Name	Description
1	⏻	ON/OFF	Switches the balance on or off.
2		Capacitive color TFT touch screen	General navigation
3	→T←	Tare	Tares the balance.
4	→0←	Zero	Zeros the balance.
5	⌂	Home	Returns from any menu level, or other window to the application home screen.

3.5 User Interface

The screen displays information and allows the user to enter commands by tapping certain areas on its surface. You can choose the information displayed on the screen, change the balance settings and perform certain operations on the balance.

3.5.1 Main settings and activities at a glance

Depending on the application, the options available to be selected and their content may differ.

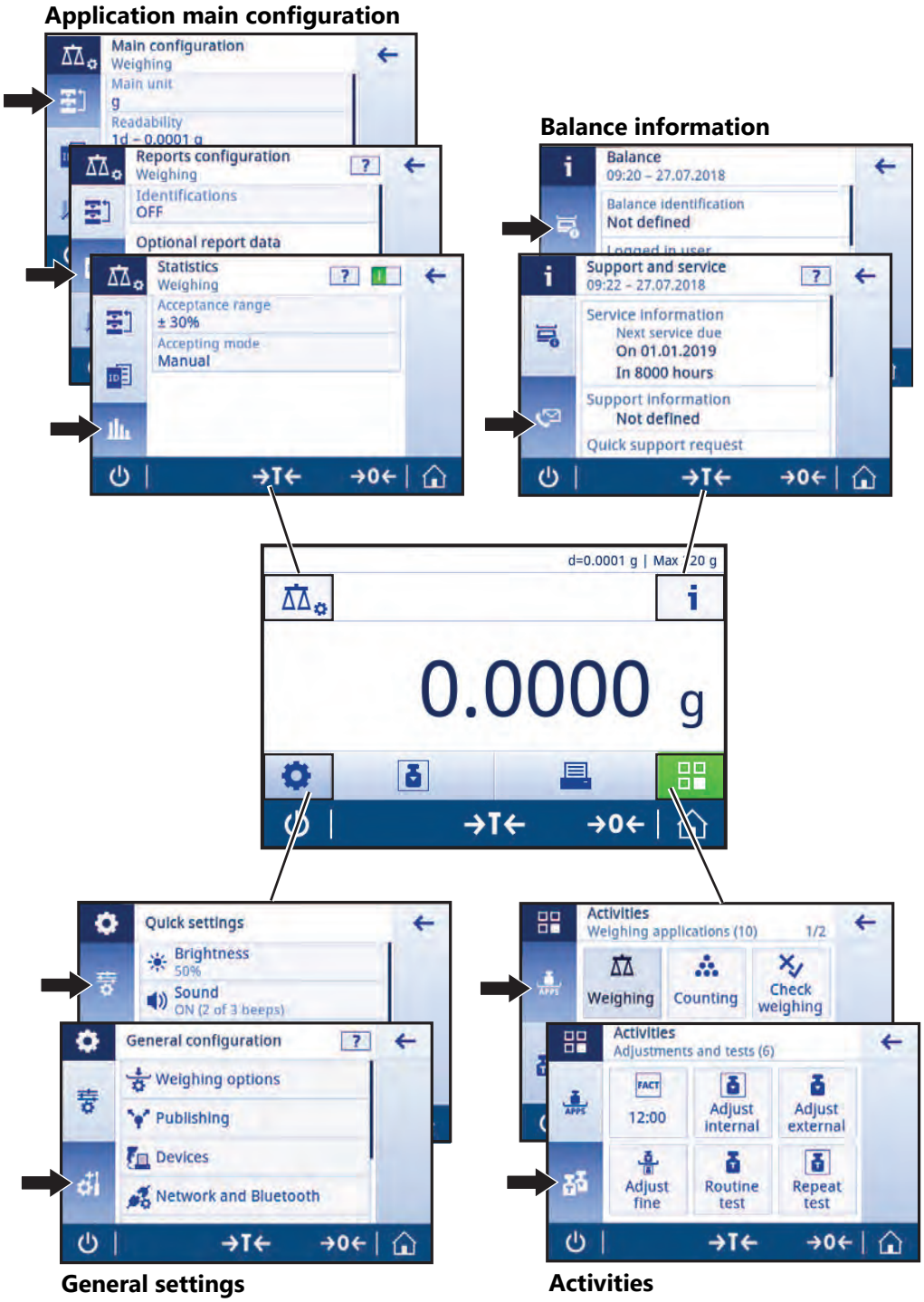

3.5.2 Application home screen

The application home screen appears after switching the balance on. It always displays the last application that was in use before the balance was switched off. The application home screen is the main screen of the balance. Every function can be accessed from here. You can return to the application home screen at any time by pressing the home button ⌂ in the lower right corner of the screen.

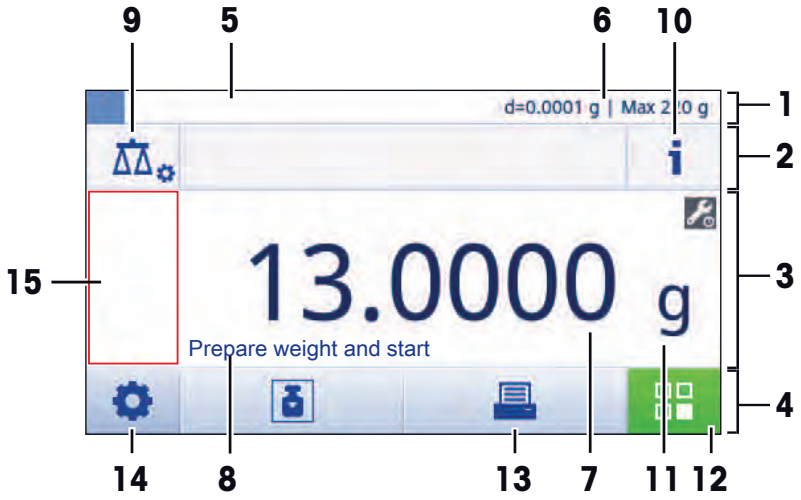

Information and work bars

	Name	Description
1	Weighing information bar	Displays the weighing-in aid and general balance information.
2	Work title bar	Displays information about the current activity.
3	Value bar	Displays information about the current weighing process.
4	Main navigation	Work-related functions.

Information fields

	Name	Description
5	Weighing-in aid	A dynamic graphic indicator displays how much of the total weighing range is in use.
6	Short balance information	Readability and capacity of the balance.*
7	Weighing value field	Displays the value of the current weighing process (model-specific).
8	Coach text field	Displays instructions for the current weighing process.

* For legal-for-trade approved balances: **Min** (minimum capacity) and **e** (verification of scale interval) are shown in the upper left corner.

Action buttons

	Name	Description
9	Main activity configuration	To configure the current application, e.g., **Weighing**.
10	Detailed balance information	Displays detailed technical data about the balance.
11	Weighing unit	Displays the unit of the current weighing process (model- and country-specific).
12	Activities	Opens the activities selection.
13	Print	Prints out results and/or settings (printer required).
14	Settings/preferences	Configures balance and user settings/preferences (application independent).
15	Status information field	Displays information about the system status.

3.5.3 Entering characters and numbers

The keyboard allows the user to enter characters, including letters, numbers and a range of special characters.

If a barcode reader is connected to your balance and your sample provides a barcode, scan the product barcode instead of entering the designation manually (e.g. the ID can be scanned via barcode reader to ensure that the sample is clearly assigned to the corresponding product). Additionally, it is possible to connect a USB keyboard to enter the information.

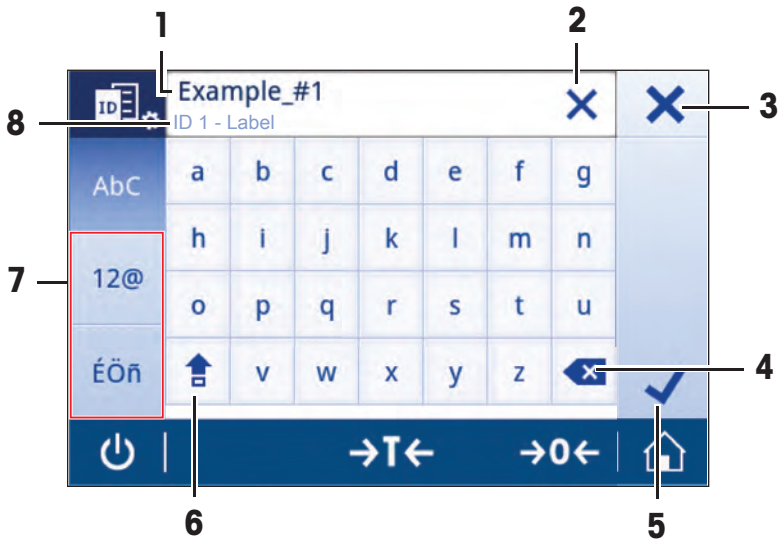

	Name	Description
1	Input field	Displays all characters that have been entered.
2	Delete all	Deletes all entered characters.
3	Discard	Discards the entered data and exits the dialog.
4	Delete	Deletes the last character.
5	Confirm	Confirms the data entered.
6	Shift	Switches between lower and upper case letters.
7	Specialized tabs	Switches keyboard mode for entering letters, numbers or special characters.
8	Explanation field	Extra information about the value to be entered.

3.5.4 Lists and tables

Navigation: ⚙ > General configuration

The basic elements in a simple list include a content title and a list of sub-elements. Tapping an element opens a list of sub-elements or an input dialog.

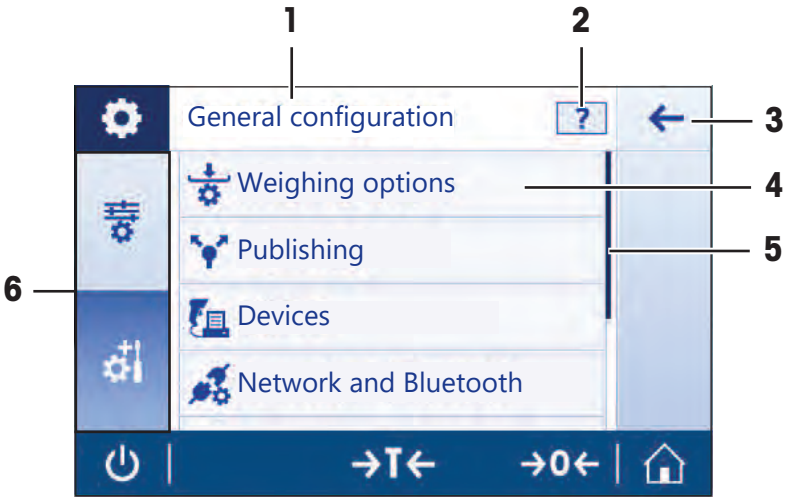

	Name	Description
1	List title	Title of the current list.
2	Contextual help	Additional information about the current process
3	Back button	Moves go one step back.
4	List element title	Title of the list element.
5	Scroll position	Scrolls through the list.
6	Selection tabs	Tabs of the selectable sub-categories.

3.5.5 Detailed balance information

– Tap i to open the general balance information menu.

Balance identification

The balance identification section contains identification data for both hardware and software.

– Tap to display **Balance identification**.

➡ The display shows the **Balance identification** as defined by the user. See [System settings ▸ Page 44] and information about the software and hardware.

Balance support information

The balance support information section contains information about last and next service checks and provides support contact information.

– Tap to display **Support and service**.

➡ The display shows the **Service information**, **Support information**, and **Quick support request**.

Quick support request

The **Quick support request** option contains a unique QR (Quick Response) code. If you have a QR code reader application on your smart phone, scan the QR code on the balance screen. The smartphone will automatically create an email with all relevant service information.

Note

Make sure that the QR code can be identified by the smart phone. A program to read the QR codes must be installed. Make sure that there are no access restrictions, which could block your email program in some way.

3.5.6 Basic navigation

3.5.6.1 Touch screen navigation

To interact with the balance, use the screen and the operating keys at the bottom of the screen.

Opening an application

Navigation: > Activities - Weighing applications

To open settings or applications, tap with your finger on the application symbol, e.g., **Weighing**.

There is not enough space to show all the weighing applications on one screen. Scroll horizontally to reach the applications on the second page.

Scrolling

Navigation: ⚙ > Quick settings

When the options are too numerous to be displayed on one screen, a blue bar on the right side appears. This means that the user can scroll up and down. To scroll simply place your finger anywhere on the list and drag it up or down.

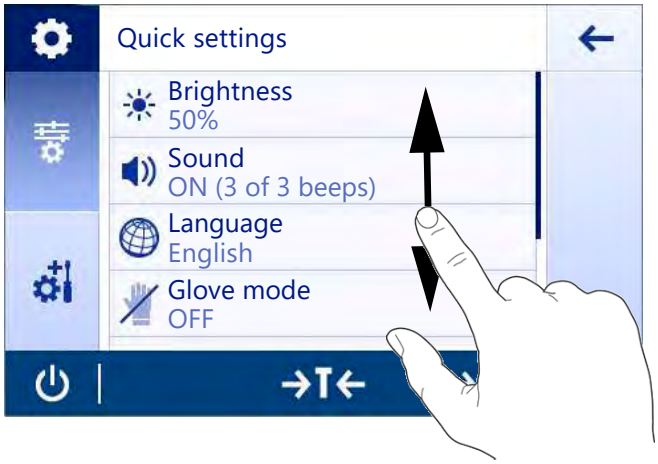

Using shortcuts

To simplify navigation on the touch screen, there are a few shortcuts that provide quick access to key areas of the balance. For example, the weighing value field on the application home screen works as a shortcut (see screen below), as does the weighing unit next to the weighing value field. Other shortcuts may be available to use depending on the application.

Every setting that can be changed directly via shortcut, can also be changed in the main configuration settings for that application.

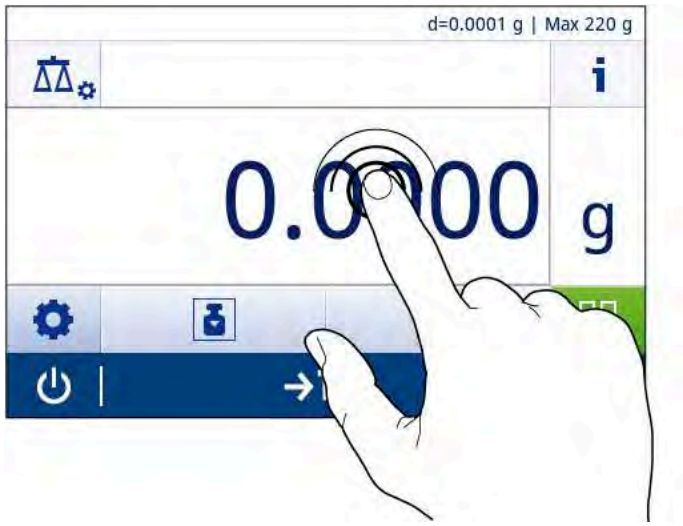

4 Installation and Putting into Operation

4.1 Selecting the location

A balance is a sensitive precision instrument. The location where it is placed will have a profound effect on the accuracy of the weighing results.

Requirements of the location

Place indoors on stable table

Ensure sufficient spacing

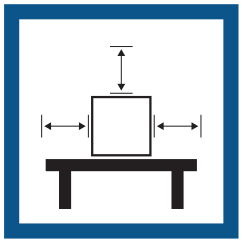

Level the instrument

Provide adequate lighting

Avoid direct sunlight

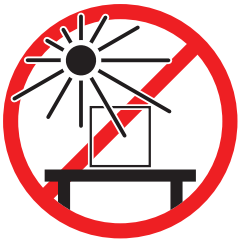

Avoid vibrations

Avoid strong drafts

Avoid temperature fluctuations

Sufficient spacing for balances: > 15 cm all around the instrument

Take into account the environmental conditions. See "Technical Data".

4.2 Unpacking

Open the balance packaging. Check the balance for transport damage. Immediately inform a METTLER TOLEDO representative in the event of complaints or missing accessories.

Retain all parts of the packaging. This packaging offers the best possible protection for transporting the balance.

4.3 Scope of delivery

Components		0.1 mg	1 mg	10 mg	100 mg
Balance with draft shield	235 mm	✓	✓	–	–
Balance		–	–	✓	✓
Weighing pan	ø 90 mm	✓	–	–	–
	ø 120 mm	–	✓	–	–
	170×190 mm	–	–	✓	✓
Draft shield element		✓	–	✓	–
Pan support		✓	✓	✓	✓
Bottom plate		✓	✓	–	–
Protective cover		✓	✓	✓	✓
Universal AC/DC adapter		✓	✓	✓	✓
User Manual		✓	✓	✓	✓
Declaration of Conformity		✓	✓	✓	✓

4.4 Assembling the balance

⚠ CAUTION

Injury due to sharp objects or broken glass

Instrument components, e.g., glass, can break and lead to injuries.

– Always proceed with focus and care.

Balances with a readability of 0.1 mg with draft shield (235 mm)

Place the following components on the balance in the specified order:

1 Push the side glass doors (1) back as far as they will go.

2 Insert the bottom plate (2).

3 Insert the draft shield element (3) and weighing pan (5) with pan support (4).

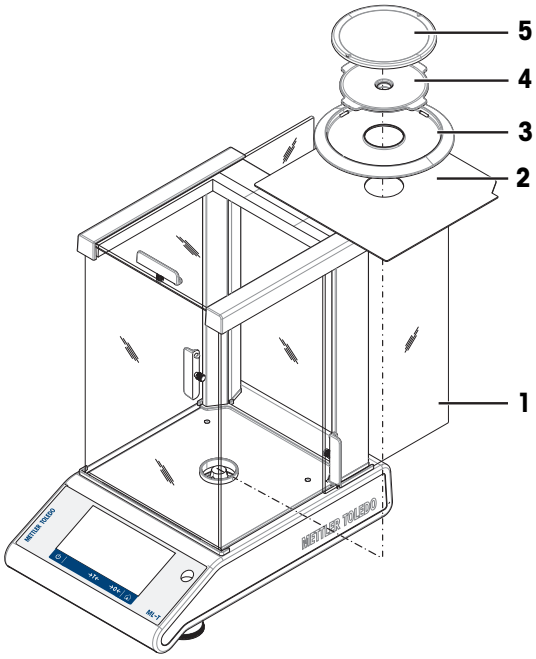

Balances with a readability of 1 mg, with draft shield (235 mm)

Place the following components on the balance in the specified order:

1 Push the side glass doors (1) back as far as they will go.
2 Insert the bottom plate (2).
3 Insert the weighing pan (4) with pan support (3).

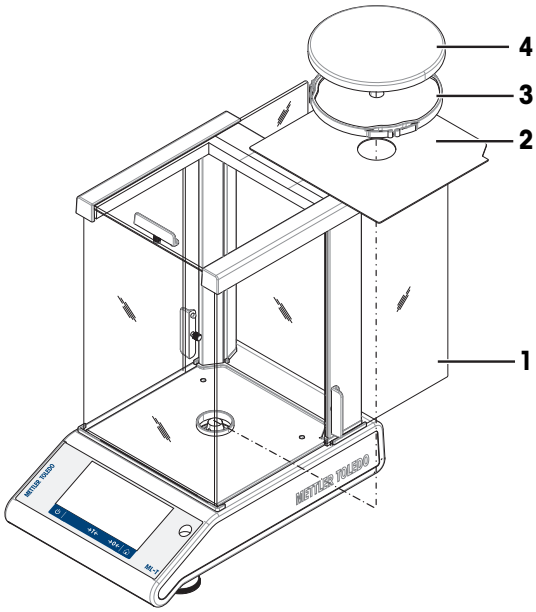

Balances with a readability of 10 mg with square weighing pan and draft shield element

1 Remove the two screws (1).
2 Remove the plate (2) and retain it.
3 Place the draft shield element (3) and fix it with the two screws.
4 Place the pan support (4) with weighing pan (5).

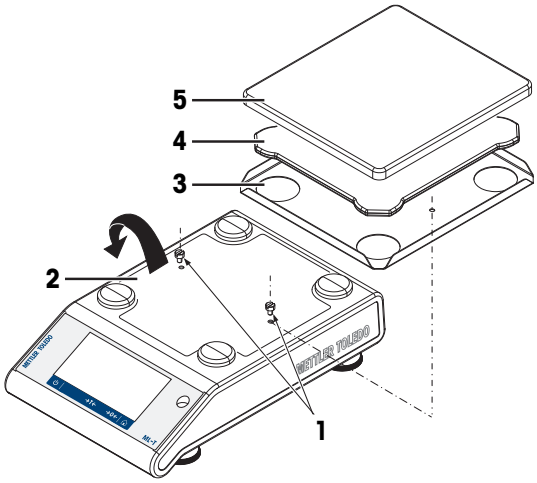

Balances with a readability of 100 mg with square weighing pan

Place the following components on the balance in the specified order:

- Place the pan support (1)
- Place the weighing pan (2)

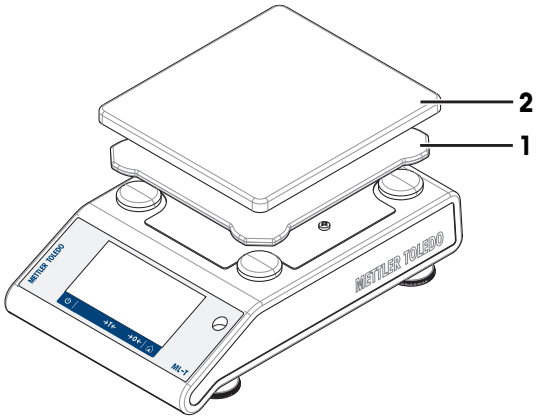

4.5 Putting into operation

4.5.1 Connecting the balance

⚠ WARNING

Death or serious injury due to electric shock

Contact with parts that carry a live current can lead to death or injury.

1 Only use the METTLER TOLEDO power cable and AC/DC adapter designed for your instrument.
2 Connect the power cable to a grounded power outlet.
3 Keep all electrical cables and connections away from liquids and moisture.
4 Check the cables and the power plug for damage and replace them if damaged.

NOTICE

Damage to the AC/DC adapter due to overheating

If the AC/DC adapter is covered or in a container, it is not sufficiently cooled and will overheat.

1 Do not cover the AC/DC adapter.
2 Do not put the AC/DC adapter in a container.

1 Insert the plug of the AC/DC adapter (**1**) in the power inlet of the instrument.
2 Screw the plug into the balance if applicable.
➡ The balance is ready for use.

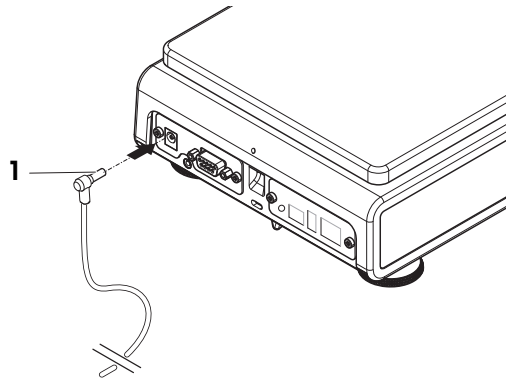

Note

Always connect the AC/DC adapter to the balance before connecting to the power.

Do not connect the instrument to a power outlet controlled by a switch. After switching on the instrument, it must warm up before giving accurate results.

See also

Technical Data ▸ Page 116

4.5.2 Battery operation

The balance can also operate with batteries, especially useful in the case of regular power outages. Under normal operation conditions, the balance works independently of the AC power line for up to 8 hours for balances with a readability of 1 - 100 mg and 2 hours for balances with a readability of 0.1 mg (using alkaline batteries). If the battery run time is not sufficient it is recommended to use lithium batteries (e.g., Energizer™ ULTIMATE LITHIUM), achieving a battery run time of more than 8 hours.

Immediately after the AC power supply is interrupted, e.g., by withdrawing the power plug or if there is a power failure, the balance switches automatically to battery operation. Once the AC power supply is restored, the balance reverts automatically to AC operation.

It is also possible to use rechargeable batteries. Charging batteries inside the balance is **not** possible.

Rechargeable batteries have a lower voltage of 1.2 V. Therefore, the battery indication shown on the balance might differ from the actual battery status.

Your balance uses 8 standard AA batteries (alkaline or lithium batteries preferred).

The Bluetooth dongle or other options only work when the balance is connected to the power supply and is not only powered by batteries.

In battery operation mode, a battery symbol appears in the status information field. The size of the white bar indicates the battery condition. When the batteries status reaches 25%, part of the symbol becomes red. If the status is lower than 15%, the whole symbol becomes red.

Switch the balance on and off in battery operation

The balance must be switched on in battery operation with the Bat.ON switch on the rear of the balance. The ⏻ key on the touch screen does not work, since the touch screen in the battery operation has no power supply in the extended state.

1 Press the Bat.ON switch on the rear of the balance to switch on the balance.

2 Press ⏻ to switch off the balance.

Inserting / replacing batteries

⚠ WARNING

Death or serious injury due to electric shock

Contact with parts that contain a live current can lead to injury and death.

– Disconnect the instrument from the power supply when replacing batteries.

- Read and follow all warnings and instructions supplied by the battery manufacturer.
- Do not mix different types or brands of batteries. Performance of batteries varies depending on the manufacturer.
- Remove the batteries from the balance if the balance is not used for a long period of time.
- Batteries must be disposed of properly, according to local regulations.

■ Make sure that the balance is off before removing or inserting batteries.

1 Remove weighing pan, pan support and draft shield element or draft shield "100 mm" if present.

2 **NOTICE: Damage to the instrument. Do not place the instrument on the pan support location bolt.** Turn the balance carefully on its side.

3 Open and remove the battery-chamber cover.

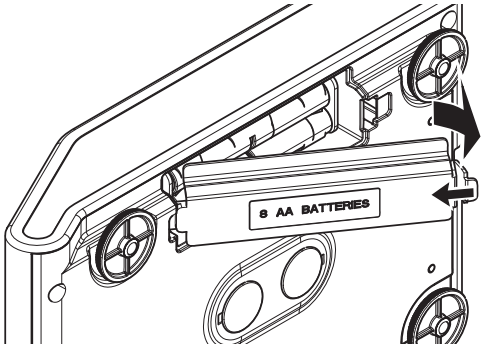

4 Insert / replace the batteries with the correct polarity as shown in the battery holder.
5 Insert and close the battery-chamber cover.
6 Turn the balance carefully to its normal position.
7 Reinstall all components in the reverse order.
8 Press the Bat.ON switch on the rear of the balance to switch on the balance.

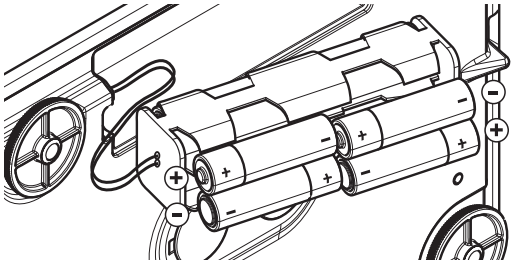

4.5.3 Switching on the balance

Before using the balance, it must be warmed up in order to obtain accurate weighing results. To reach operating temperature, the balance must be connected to the power supply for at least 30 minutes (60 minutes for 0.1 mg / 0.01 mg models).

- The balance is connected to the power supply.
- The balance is warmed up.

– Press ⏻.

➡ After the start screen has disappeared, the application home screen will open.

When the balance is switched on for the first time, the **Weighing** application home screen will open. If the balance is switched on again, it will always start with the screen of the application last used before switching it off.

4.5.4 Changing the date and time

Navigation: ⚙ > General configuration > System settings > Date and Time

The dialog (Picker view) allows the user to set the date and time.

Tap 🕒 for **Time** and 25 for **Date**. The format can be selected by tapping ⌄.

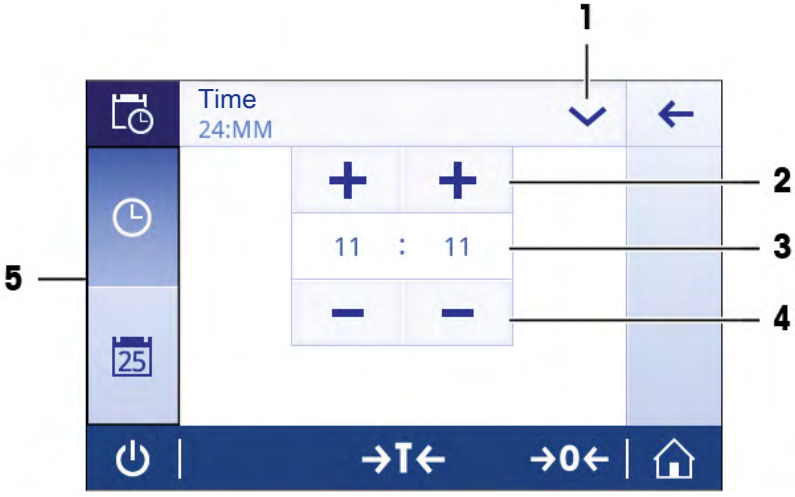

	Name	Description
1	Change date/time format	Various date/time formats can be selected.
2	Pick button	Increment.
3	Picker field	Displays the defined time/date.
4	Pick button	Decrement.
5	Selection tabs	Tabs of the selectable sub-categories.

4.5.5 Leveling the balance

Exact horizontal and stable positioning are essential for repeatable and accurate weighing results.

The balance can be levelled using the leveling assistant and/or the level indicator in front of the balance. There are two adjustable leveling feet to compensate for slight irregularities in the surface of the weighing bench.

The balance must be leveled and adjusted each time it is moved to a new location.

Balances with two levelling feet

1 Position the balance at the selected location.
2 Align the balance horizontally.
3 Turning the two front leveling feet of the housing until the air bubble is in the middle of the glass.

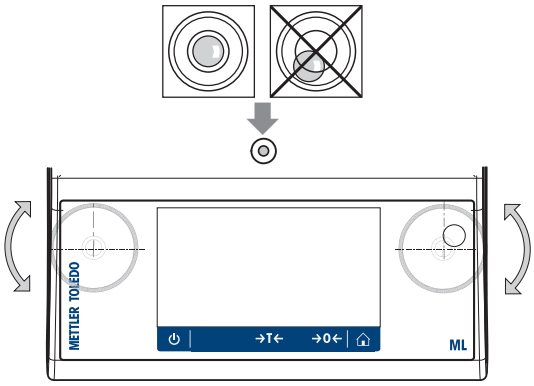

Balances with four levelling feet

1 First turn the two rear leveling feet all the way in.
2 Adjust the two front leveling feet as previously described.
3 Turn the rear leveling feet down onto the surface for extra stabilizing safety, so the balance cannot tilt over under eccentric loads.

Example

Air bubble at 12 o'clock: turn both feet clockwise.

Air bubble at 3 o'clock: turn left foot clockwise, right foot counterclockwise.

Air bubble at 6 o'clock: turn both feet counterclockwise.

Air bubble at 9 o'clock: turn left foot counterclockwise, right foot clockwise.

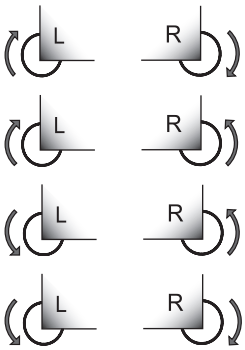

4.5.5.1 Leveling the balance using the leveling assistant

When the balance is switched on at its new location, the symbol **The instrument is out of level** appears in the status information field on the left of the screen.

1 Tap .

➡ The screen **Notifications** appears.

2 Select **The instrument is out of level**.

➡ The function **Leveling assistant** appears.

The function **Leveling assistant** is a step-by-step guide that helps to level the balance.

Navigation: ⚙ Quick settings/Preferences > ◎ Leveling assistant

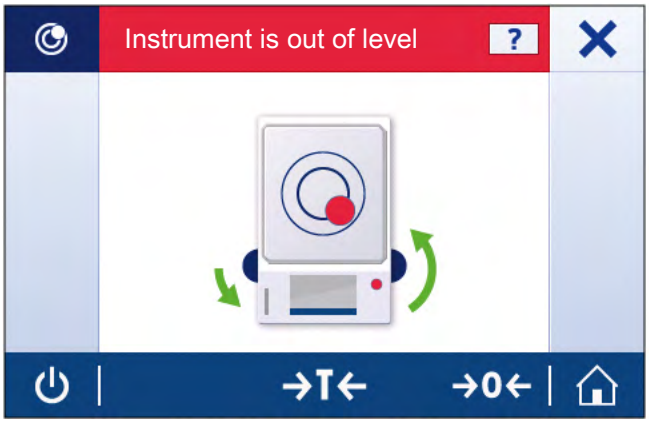

After following the instructions, the leveling assistant will display the next steps. Follow the steps until the balance is level.

Note

Always use the physical air bubble on the level indicator as a reference. If the physical air bubble is centered, but the symbol ◎ **The instrument is out of level** still appears on the screen, please consider performing a central adjustment of the level indicator. See System settings.

4.5.6 Adjusting the balance

To obtain accurate weighing results, the balance must be adjusted to match the gravitational acceleration at its location. This is also dependent on the ambient conditions. After reaching the operating temperature, it is important to adjust the balance in the following cases:

- Before the balance is used for the first time.
- If the balance has been disconnected from the power supply or in the event of power failure.
- After significant environmental changes, e.g., temperature, humidity, air draft or vibrations.
- At regular intervals during weighing service.

4.6 Performing a simple weighing

This section describes how to perform a simple weighing operation. The basic navigation concept and the basic functions of the balance are also explained.

When you switch on the balance for the first time, the **Weighing** application home screen opens automatically. If the balance has already been used, the application that was last used before the balance was switched off will open. If another application is running, switch to **Weighing**.

Navigation: ▦ > APPS Activities - Weighing applications > ⚖ Weighing

1 Press →0← to zero the balance.

➡ The application home screen appears.

2 Place the sample on the weighing pan.

➡ The instability symbol ○ appears and the value in the weighing value field becomes **light blue**.

3 Wait until the instability symbol ○ disappears and the value in the weighing value field becomes **dark blue** again.

➡ The weighing process is complete.

➡ The results are now displayed.

Zeroing

Use the →0← zeroing key before starting to weigh anything.

1 Unload the balance.

2 Press →0← to zero the balance.

➡ All weight values are measured in relation to this zero point.

Taring

If you are working with a weighing container, tare the balance.

1 Place a container on the weighing pan.

➡ The weight is displayed.

2 Press →T← to tare the balance.

➡ **0.000 g** and **Net** appears in the display. **Net** indicates that all weight values displayed are net values.

Weighing

– Place the sample in the container.

➡ The results are now displayed.

- If the container is removed from the balance, the tare weight will be shown as a negative value.
- The tare weight remains stored until the →T← key is pressed again or the balance is switched off.

Switching weight units

There are several weighing units available. The default value is country-specific.

The weighing unit can be selected using the main configuration of the current application or via shortcut. This example describes how to change the weighing unit via shortcut.

Legal-for-trade

With approved balances, the menu topic has a fixed setting and cannot be changed.

1 Tap the weighing process unit (shortcut) **gram (g)**.

➡ The screen **Main unit** appears.

2 Place your finger somewhere on the list and swipe up to scroll down.

3 Select another weighing unit (e.g. **ounce (oz)**) by tapping it.

4 Tap ✓ to confirm.

➡ The weighing unit **gram (g)** has now been changed to **ounce (oz)**.

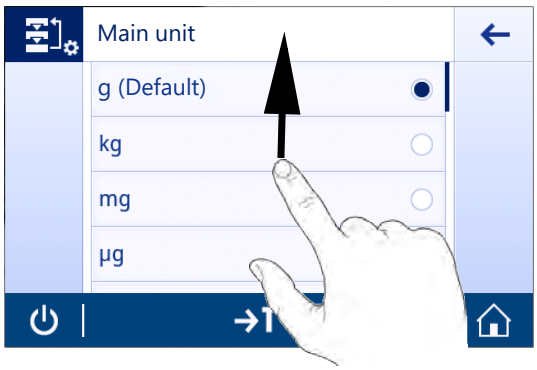

Changing the readability

There are several readabilities available. The default readability (d) is model-specific.

1 Tap the weighing value field.

2 Tap **10d - 0.001 g**.

3 Confirm the selected readability by tapping ✓.

➡ The readability has now been changed.

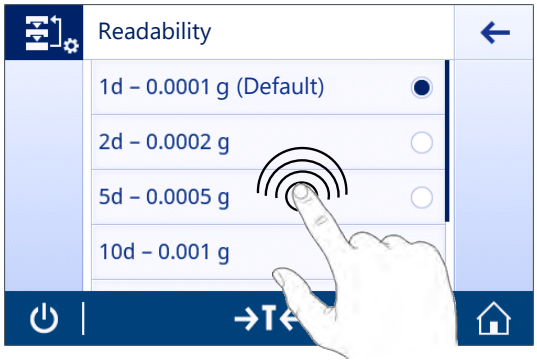

Print / transmit data

The balance can send data to a printer or a PC. Press the key to transmit the weighing results or settings via the interface. The procedure for activating and configuring a printer is described in "Publishing" and "Devices".

- Printer is connected to the balance.
- Printer is switched on.
- Printer is activated and configured.

– Tap .

➡ The data are transmitted.

Switching off

1 Press and hold ⏻ until the dialog **Switch-off** appears.

2 Tap ✓ to confirm.

➡ The balance switches off and enters standby mode.

- After switching on from standby mode, the balance does not need to warm up. It is immediately ready to start weighing.
- If the balance has been switched off manually, the display will also be off.

  To switch off the balance fully, it must be disconnected from the power supply.

4.7 Transporting, packaging and storage

⚠ CAUTION

Injury due to sharp objects or broken glass

Instrument components, e.g., glass, can break and lead to injuries.

– Always proceed with focus and care.

1 Press and hold the ⏻ key.
2 Disconnect the balance from the AC/DC adapter.
3 Disconnect all interface cables.

4.7.1 Transporting over short distances

To move the balance over a short distance to a new location, follow the instructions below.

1 Hold the balance with both hands as shown.
2 Carefully lift the balance and carry the balance in horizontal position to the new location.

If you want the balance put into operation, proceed as follows:

1 Connect in reverse order.
2 Level the balance.
3 Perform an internal adjustment.

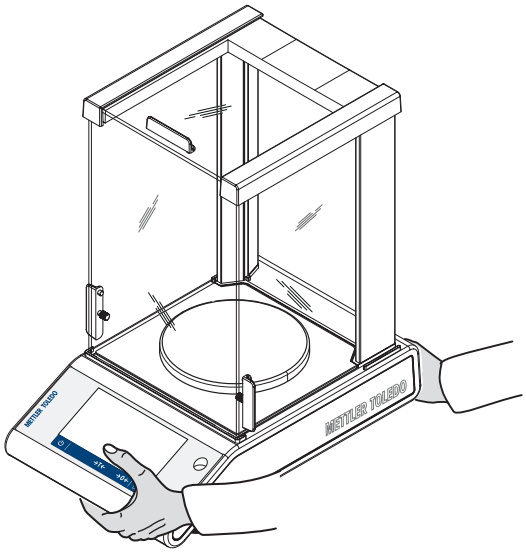

4.7.2 Transporting over long distances

METTLER TOLEDO recommends using the original packaging for transportation or shipment of the balance or balance components over long distances. The elements of the original packaging are developed specifically for the balance and its components and ensure maximum protection during transportation.

4.7.3 Packaging and storage

Packaging

Store all parts of packaging in a save place. The elements of the original packaging are developed specifically for the balance and its components to ensure maximum protection during transportation or storing.

Storage

Store the balance under following conditions:

- Indoor and in the original packaging.
- According to the environmental condition, see "Technical data".
- When storing for longer than six months, the rechargeable battery maybe down (date and time get lost).

4.8 Weighing below the balance

Your balance is equipped with a weighing hook for performing weighing operations below the work surface (weighing below the balance).

Note

Models with a glass draft shield: carefully lift the draft shield from the weighing platform and put it aside.

1 Press and hold the ⏻ key.
2 Disconnect the balance from the AC/DC adapter.
3 Disconnect all interface cables.

1 Remove weighing pan, pan support and draft shield or "Easy draft shield" element if present.

2 **NOTICE: Damage to the instrument. Do not place the instrument on the pan support location bolt.** Turn the balance carefully on its side.

3 Remove one of the weighing caps (1) depending on the model. Keep it for later use.

4 Turn the balance to its usual position and simply reinstall all components in the reverse order.

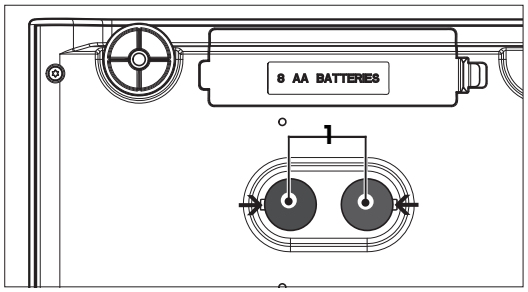

5 General Settings

Navigation: ⚙

This section describes the procedure for adapting the balance to suit specific requirements. The settings apply to the entire weighing system and therefore to all applications.

The section **Settings** is divided into two sub-sections:

- **Quick settings**
- **General configuration**

All settings and configuration data can be printed out.

■ Printer is connected and configured.

1 Tap .

➡ The screen **Print and export report** appears.

2 Select the settings, e.g., **Quick settings** and **Weighing options** for printing and confirm with ✓.

➡ A list of the selected settings will be printed.

Parameter	Description	Values
Print	Select the settings for printing.	Quick settings* I Weighing options* I Publishing* I Devices* I Network and Bluetooth* I System settings* I User management* I ISO-Log – Adjustments I ISO-Log – Balance I ISO-Log – Settings and status I ISO-Log – Activity fails

5.1 Quick settings

Navigation: ⚙ > Quick settings

The following options are available:

- **Brightness**
- **Sound**
- **Language**
- **Glove mode**
- **Quick adjustment**
- **Date/Time widget**
- **Leveling assistant**
- **Change user password…** (only if **User management** is activated)

5.1.1 Brightness

Navigation: ⚙ > Quick settings > Brightness

This menu item can be used to adjust the display brightness. Each time you tap the bar, the brightness adjusts in increments of 10%.

The following options can be set:

Parameter	Description	Values
Brightness	Sets the brightness of the display (in 10% increments).	10…100% (80%*)

* Factory setting

5.1.2 Sound

Navigation: ⚙ > Quick settings > Sound

This menu item can be used to adjust the sound and the sound volume.

The following options can be set:

Parameter	Description	Values
Stability beep	Indicates when an unstable weight becomes stable.	OFF I Low* I Medium I High
Workflow feedback beep	Provides additional feedback in the event of input errors, messages and status notifications.	OFF I Low* I Medium I High
Touch beep	Notifies every touch of the interactive elements on the touch display and zero/tare bar.	OFF* I Low I Medium I High

* Factory setting

5.1.3 Language

Navigation: ⚙ > Quick settings > Language

This menu item can be used to set the dialog language. The language changes immediately. All windows and messages are displayed in the selected language.

The following options can be set:

Parameter	Description	Values
Language	Sets the preferred language. The language is normally preset for the country of use.	English I Deutsch I Français I Español I Italiano I Русский I Polski I Česky I Magyar I Nederlands I Português PT. I Português BRA. I Türkçe I 中文 I 日本語 I 한국어

5.1.4 Glove mode

Navigation: ⚙ > Quick settings > Glove mode

If **Glove mode** is activated, the touch screen becomes more sensitive and easier to navigate when wearing gloves.

The following options can be set:

Parameter	Description	Values
Glove mode	Activates or deactivates the function **Glove mode**.	ON I OFF*

* Factory setting

5.1.5 Quick adjustment

Navigation: ⚙ > Quick settings > Quick adjustment

If **Quick adjustment** is activated, the symbol appears in the main navigation of the application. You can start the adjustment directly from the work area.

The following options can be set:

Parameter	Description	Values
Quick adjustment	Activates or deactivates **Quick adjustment**.	ON* I OFF
	Starts the adjustment directly from work area.	Internal adjustment (model-specific) I External adjustment

5.1.6 Date/Time widget

Navigation: ⚙ > Quick settings > Date/Time widget

This option can be activated to permanently display the current date and time in the work area in the value bar above the weighing value field.

The following options can be set:

Parameter	Description	Values
Date/Time widget	Activates or deactivates the permanent display of the current date and time in the work area.	ON I OFF*

* Factory setting

5.1.7 Leveling assistant

Navigation: ⚙ > Quick settings > Leveling assistant

The function **Leveling assistant** helps to adjust the balance, e.g., if the balance has changed location.

For more information, see [Leveling the balance ▸ Page 24].

5.1.8 Change password

Navigation: ⚙ > Quick settings/Preferences > Change password…

If user management is activated and the user is protected with a password, the user password can be changed in this section.

1 Tap **Change password…**.
   ➡ The screen **Old password** appears.
2 Enter the password and confirm with ✓.
3 The screen **New password** appears.
4 Enter the password and confirm with ✓.
   ➡ The screen **Confirm password** appears.
5 Enter the password again and confirm with ✓.
   ➡ The screen **Password changed** appears.
6 Tap ✓ to confirm.
7 Tap ← to return to the application screen.

5.2 General configuration

Navigation: ⚙ > General configuration

The following options are available:

- **Weighing options**
- **Publishing**
- **Devices**
- **Network and Bluetooth**
- **System settings**
- **User management**
- **ISO-Log**

5.2.1 Weighing options

Navigation: ⚙ > General configuration > Weighing options

This menu item can be used to adapt the balance to suit specific requirements.

5.2.1.1 Weighing mode

Navigation: ⚙ > General configuration > Weighing options > Weighing mode

This setting can be used to configure the balance to the weighing mode.

The following options can be set:

Parameter	Description	Values
Weighing mode	Sets the weighing mode. **Universal** = for all standard weighing applications. **Dosing** = for dosing liquid or powdery samples.	Universal* I Dosing

* Factory setting

5.2.1.2 Environment

Navigation: ⚙ > General configuration > Weighing options > Environment

This setting is used to adapt the balance optimally to the ambient conditions at specific locations.

The following options can be set:

Parameter	Description	Values
Environment	Sets the ambient conditions.	Stable I Standard* I Unstable I Very unstable

* Factory setting

5.2.1.3 Autozero

Navigation: ⚙ > General configuration > Weighing options > Autozero

This menu item can be used to switch the automatic zero correction **ON** or **OFF**. It corrects the zero deviation, that may occur, e.g., due to slight fouling of the weighing pan.

Legal-for-trade

The **Autozero** cannot be deactivated for approved balances (except for some selected countries).

The following options can be set:

Parameter	Description	Values
Autozero	Activates or deactivates the automatic zero correction.	ON* I OFF

* Factory setting

5.2.1.4 Auto tare

Navigation: ⚙ > General configuration > Weighing options > Auto tare

Tare automatically the first weight loaded on the empty weighing pan (zeroed). This function applies to all applications except **Formulation** and **Back-weighing**.

The following options can be set:

Parameter	Description	Values
Auto tare	Activates or deactivates the auto tare function.	ON I OFF*

* Factory setting

5.2.1.5 Auto clear tare

Navigation: ⚙ > General configuration > Weighing options > Auto clear tare

If the function **Auto clear tare** is activated, the current tare is automatically cleared after removing all loaded weight from the weighing pan. This function applies to all applications except **Formulation** and **Back-weighing**.

The following options can be set:

Parameter	Description	Values
Auto clear tare	Activates or deactivates the auto clear tare function.	ON I OFF*

* Factory setting

5.2.1.6 MinWeigh

Navigation: ⚙ > General configuration > Weighing options > MinWeigh

The **MinWeigh method** function notifies when a measurement value does not meet the required weighing accuracy. The usage of MinWeigh is application-specific (contextual settings).

Setting the **MinWeigh method**

1 Tap **MinWeigh**.
   ➡ The screen **MinWeigh configuration** appears.
2 Tap **MinWeigh method**.
   ➡ The screen **MinWeigh method** appears.
3 Select method and confirm with ✓.
   ➡ The screen **MinWeigh configuration** appears.
4 Tap **Minimum weight**.
   ➡ The dialog screen **Minimum weight in g** appears.
5 Enter the weight for the minimum weight and confirm with ✓.
   ➡ The screen **MinWeigh configuration** appears.
6 Tap ✓ to return to the previous screen.

The following options can be set:

Parameter	Description	Values
MinWeigh	Activates or deactivates the **MinWeigh** method.	Not defined*
	Sets the MinWeigh method.	Customized I Certificate

* Factory setting

The selectable options in the dialog **MinWeigh configuration** vary depending on the chosen method.

The following methods are available:

- **Customized**
- **Certificate**
- **OIML**

Legal-for-trade

The **OIML** method is only available for approved balances.

5.2.1.7 Recall

Navigation: ⚙ > General configuration > Weighing options > Recall

To retain and recall the last stable weight.

The following options can be set:

Parameter	Description	Values
Recall	Activates or deactivates recall.	ON I OFF*

* Factory setting

5.2.2 Publishing

Navigation: ⚙ > General configuration > Publishing

The publishing options can be defined individually for all corresponding receiving devices/services available in the general settings area **Devices**.

Define which work output you want to produce, in which ways and in which format.

The available options may vary depending on the peripheral device connected and configured in "Devices". Not every option described is available for the selected peripheral.

The publishing menu is structured in the following sections:

- **Print and export report**
- **Send data**
- **Advanced options**

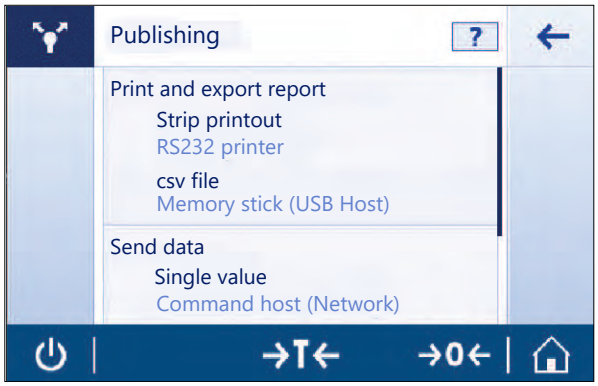

5.2.2.1 Print and export report

Navigation: ⚙ > General configuration > Publishing > Print and export

The following sections are available. While the main configuration is always available, the print report and export report file(s) are only available depending if a device/service is setup.

- **General configuration**
- **Print report**
- **Export report file**

Print and export – General configuration

The following options can be set, which are valid for both the **Print report** and the **Export report file**.

Parameter	Description	Values
Single values reports	Sets the behaviour of the printer for single values.	Manual, stable* I Manual, all values I Automatic, stable (zero excluded) I Automatic, stable (zero included)
Workflow reports	Sets the workflow for the reports. **Automatic** = the report is printed at the end of the workflow automatically. **Manual** = the report is printed at will.	Automatic* I Manual
FACT report	Defines whether the FACT report is being printed automatically.	Automatic* I OFF

* Factory setting

Depending on the application the behavior, when a report/result is published, can be different.

- Single values reports (S): Each generated weight value can be manually or is automatically published
  - Weighing
  - Counting
  - Check weighing
  - Dynamic weighing
  - Percent weighing
  - Factor weighing
- Workflow reports (W): Several weight values are stored during a workflow within the application and the final result can be manually or is automatically published at the very end of the workflow.
  - Formulation
  - Totaling
  - Back-weighing
  - Density
  - Adjustment and tests

An example workflow of how a report could be set up correctly to publish the data is shown below. As a prerequisite, the device/service needs to be configured correctly beforehand in **Devices**.

1 Tap **Print and export report**.

➡ The screen **Print and export – General configuration** appears.

2 Tap **Single values reports**.

➡ The screen **Single values reports** appears.

3 Select, e.g., **Automatic, stable** and confirm with ✓.

➡ The next stable weight is automatically printed and/or exported.

4 Tap **Workflow reports**.

➡ The screen **Workflow reports** appears.

5 Select, e.g., **Automatic** and confirm with ✓.

➡ The workflow report is automatically printed and/or exported.

Print report

Print out manually or automatically application, adjustment and test results on strip paper.

The following options can be set:

Parameter	Description	Values
Printout type	Activates or deactivates the printer.	ON* I OFF

Export report file

Export the weighing results and additional data according the report configuration in each application to a USB memory stick (CSV, TXT or XML file) or a FTP file server (XML file).

Please be aware the content of the file is always defined in the report configuration of each application (for more details go to section reports configuration).

The following options can be set:

Parameter	Description	Values
File type	Defines the file type for export. Each result generates a new XML file. However, for CSV files in single value reports (e.g., Weighing) all measurement results are stored in the same file, as long as the application, the user or any meta data is not changed.	csv I txt I xml Depending on export mode.
File name	Activates or deactivates the **Standard (Activity name)** file name. **Custom…** = defines the file name (max. 16 characters).	Standard (Default)* I Custom…
Date/Time of file creation	Activates or deactivates the date/time of the file creation at the end or beginning of the report.	ON* I OFF Add at the end* I Add at the beginning
File location	Describes the location on the USB memory stick or FTP server.	any Create a folder for the publication, e.g., "METTLER TOLEDO\Reports" on the storage device. The corresponding file will be saved in the created folder.

Below and example how to configure the publishing option to export a CSV file to USB memory stick which has to be attached.

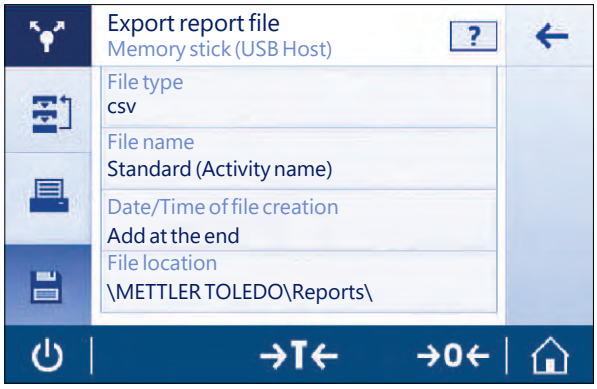

1 Tap **Export report file**.
   ➡ The screen **Export report file** appears.
2 Tap **File type**.
   ➡ The screen **File type** appears.
3 Select, e.g., **csv** and confirm with ✓.
4 Tap **File name**.
   ➡ The screen **File name** appears.
5 Select, e.g., **Custom…** by tapping.
   ➡ The screen **File name** appears.
6 Enter a name and confirm with ✓.
7 Tap ✓ to confirm.
   ➡ The screen **Date/Time of file creation** appears.
8 Activate, e.g., **Add at the beginning** and confirm with ✓.
   ➡ The data and time is printed at the beginning of the report.
9 Tap **File location**.
   ➡ The screen **File location** appears.
10 Enter a name for the path of the storage folder and confirm with ✓.
11 Tap ✓ to confirm.

5.2.2.2 Send data

Navigation: ⚙ > General configuration > Publishing > Send data

Send manually or automatically single weight- or result values to a PC with the PC-Direct, EasyDirect Balance or Command host service via RS232, USB or LAN/WLAN. We do not recommend to use WLAN in the mode automatic/continous.

For more information about PC-Direct, EasyDirect Balance and Command host and how to set it up, please refer to "Devices".

The following options can be set for PC-Direct, EasyDirect Balance and the Command host service.

PC-Direct or EasyDirect Balance

Parameter	Description	
ON* I OFF	Activates or deactivates the option send data.	
Single values	Send next stable weight.	Manual, stable* I Manual, all values I Automatic, stable (zero excluded) I Automatic, stable (zero included)
Result values	Send result value. **Automatic** = the result is sent on finishing automatically. **Manual** = the result is sent at will.	Automatic* I Manual

* Factory setting

Command host

Parameter	Description
ON* I OFF	Activates or deactivates the option send data.
Manual, stable*	**Send next stable weight at will**
Manual, all values	**Send any stable or unstable weight at will**

Automatic, stable	**Send next stable weight automatically** The next stable weight is sent after a minimal deviation, see table relationship between readability and deviation below.
Automatic, continuous	**Send any stable or unstable weight automatically**. (The weight value is sent with an update rate of 22.9 per seconds).

* Factory setting

Stability criteria: Relationship between readability and deviation

Readability	Min. deviation
0.1 mg	0.1 g
0.001 g	1 g
0.01 g	1 g
0.1 g	1 g
1 g	5 g

5.2.2.3 Advanced options

Navigation: ⚙ > General configuration > Publishing > Advanced options

The following options can be set:

Parameter	Description	Values
Autopublish	Activates or deactivates the publishing time interval.	ON I OFF*
	Sets the publishing time interval of single values. Please be aware that exporting a file to a USB memory stick or a FTP server takes some time and we therefore do not recommend to set this value in these cases below 10 seconds.	numerical values (1… 65535 seconds)
Commands options	Activates or deactivates the function **Print and tare**. The balance will tare automatically after publishing.	ON I OFF*

* Factory setting

5.2.3 Devices

Navigation: ⚙ > General configuration > Devices

Add a specific device and service, e.g., printer for RS232, barcode reader for USB or FTP server for WLAN. Added **Devices** can be temporarily made unavailable for usage (turn **OFF**).

Before adding devices or services using network or Bluetooth make sure that LAN, WLAN or Bluetooth are available and correctly configured and that Bluetooth devices are discoverable and in range. Please compare **Network and Bluetooth** in **General configuration**.

Only one device/service set up per interface is possible. On creating a new device/service the existing will be replaced. The last saved configuration of the replaced device will be used as default when the same device type is added again at a later time.

The following devices and services can be added and configured via the different interfaces.

Parameter	Description	Values
P-20	Connect to a Standard lab printer.	RS232* I USB Host
P-52	Connect to a Excellence lab printer (Dot-matrix technology).	RS232 I USB Host I LAN/WLAN I Bluetooth
P-56/58	Connect to a Excellence lab printer (Direct thermal technology).	RS232 I USB Host I LAN/WLAN I Bluetooth
Printer	Connect to a custom printer.	RS232
Barcode reader	Connect to a barcode reader.	RS232 I USB Host

Keyboard	Connect a wired USB keyboard. Only few wireless keyboards with a USB/Bluetooth converter working according USB HID class are supported (e.g., Logitec K270).	USB Host
Second display	Connect a auxiliary weight display. **Note**: If you select **Second display** make sure that no other device is connected at RS232. Other devices could be damaged because of the voltage.	RS232
Memory stick	Connect a USB memory stick. Please use a high-quality USB Memory stick, which is FAT32 formatted and empty for reliable operation. Wait at least 10 seconds after the last transaction, before you remove the USB memory stick.	USB Host
PC-Direct	Establishes a service to send the weight value to a PC. E.g., to Microsoft Excel by placing the cursor in the required cell. PC-Direct sends the weight value like a numeric keypad. Please make sure the NumLock is on. Via the USB device interface there is no additional software on the PC needed except a METTLER TOLEDO USB driver.	RS232 I USB Device
EasyDirect Balance	Establish this service to send measurement and device data to the METTLER TOLEDO data management software EasyDirect Balance running on a PC (www.mt.com/EasyDirectBalance). To benefit from the full functionality, please connect the balance via the LAN interface. We do not recommend to use EasyDirect Balance if the balance is connected to the WLAN only.	RS232 I LAN
File server (FTP)	Establishes the service to connect to a FTP Server.	Network: LAN/WLAN
Command host	Establish the Command host service to communicate with the balance via MT-SICS.	RS232 I USB Device* I Network: LAN/WLAN

* Factory setting

Adding a new device or service

By default a P-20 printer on RS232 and the command host service on USB device are already available. To add other or more devices and services there are two possibilities:

Adding a new device/service via the menu **General configuration** > **Devices**.

1 Tap [+].
2 Select the required device/service.
3 By following the step-by-step guidance the correct connection/interface is selected and the device and interface specific configuration parameters can be set. At the very end of the process all settings need to be confirmed and saved by pressing ✓.

For printers there is the possibility to check if everything is working correctly by pressing ✓✗ TEST when re-entering into the printer configuration.

Adding devices via USB Host

By connecting a, e.g., a printer on the USB host interface, the balance recognizes the new device and adds it automatically to the devices and service list. If the balance needs any additional information regarding the settings the new device symbol will blink in the home screen. In any case please check the settings of the new device/service by going into **General configuration** > **Devices** and press on the newly added device/service. Before adding a printer via USB host, please make sure it is powered on correctly. Otherwise, it will not be recognized by the balance.

Deactivating or deleting a device/service

A device/service can be deactivated any time by switching them off in the device configuration **General configuration** > **Devices**.

Press the device/service you would like to deactivate and change the on/off switch to **OFF**.

To delete a device go to **General configuration** > **Devices** press [−] and select the device/service you would like to remove and confirm with ✓.

Note

Please also consult **Publishing** and **Reports configuration** for further information.

RS232

The following options can be set depending on the connected device or service:

Parameter	Description
Command set	**MT-SICS*** | **MT-PM** | **Sartorius 22** | **Sartorius 16** **MT-SICS** = MT-SICS data transfer format is used. **MT-PM** = emulates the data format of PM balances. **Sartorius 22/Sartorius 16** = emulates the data format of Sartorius balances.
Baudrate	600 | 1200 | 2400 | 4800 | 9600* | 19200 | 38400 | 57600 | 115200 (available values are device-specific)
Bit/Parity	**8/No*** | **7/No** | **7/Mark** | **7/Space** | **7/Even** | **7/Odd**
Stop bits	**1 bit*** | **2 bits**
Handshake	**Xon/Xoff*** | **RTS/CTS** | **None**
Character set	**IBM/DOS** | **ANSI/WIN** | **UTF-8*** **UTF-8** = is a character encoding capable of encoding all possible characters, or code points, defined by unicode (device-specific).
End of line	**<CR><LF>*** | **<CR>** | **<LF>** | **<TAB>** **<CR><LF>** = writes in the same column, e.g., in Excel. **<TAB>** = writes in the same row, e.g., in Excel.

* Factory setting

USB Device (type B)

The following options can be set depending on the connected device or service:

Parameter	Description
Command set	**MT-SICS*** | **MT-PM** | **Sartorius 22** | **Sartorius 16** **MT-SICS** = MT-SICS data transfer format is used. **MT-PM** = emulates the data format of PM balances. **Sartorius 22/Sartorius 16** = emulates the data format of Sartorius balances.
Character set	**ANSI/WIN** | **UTF-8** Cannot be changed (device-specific).
End of line	**<CR><LF>*** | **<CR>** | **<LF>** | **<TAB>** **<CR><LF>** = writes in the same column, e.g., in Excel. **<TAB>** = writes in the same row, e.g., in Excel.

* Factory setting

USB Host (type A)

The following options can be set depending on the connected device or service:

Parameter	Description
Character set	**IBM/DOS** | **ANSI/WIN** | **UTF-8*** **UTF-8** = is a character encoding capable of encoding all possible characters, or code points, defined by unicode (device-specific).
End of line	**<CR><LF>*** | **<CR>** | **<LF>**

* Factory setting

Bluetooth

The following options can be set depending on the connected device or service:

Parameter	Description
Connection type	not selectable
Device name	Select the device to be configured.
Character set	**UTF-8** **UTF-8** = is a character encoding capable of encoding all possible characters, or code points, defined by unicode (device-specific).
End of line	**<CR><LF>**

LAN / WLAN

The following options can be set depending on the connected device or service:

Parameter	Description
Connection type	not selectable
IP address	Defines the IP address of the device.
Port	Defines the device port.
Command set	**MT-SICS*** | **MT-PM** | **Sartorius 22** | **Sartorius 16** **MT-SICS** = MT-SICS data transfer format is used. **MT-PM** = emulates the data format of PM balances. **Sartorius 22/Sartorius 16** = emulates the data format of Sartorius balances.
Character set	**ANSI/WIN** | **UTF-8***
End of line	**<CR><LF>*** | **<CR>** | **<LF>** | **<TAB>** **<CR><LF>** = writes in the same column, e.g., in Excel. **<TAB>** = writes in the same row, e.g., in Excel.

* Factory setting

5.2.4 Network and Bluetooth

Navigation: ⚙ > General configuration > Network and Bluetooth

For wireless communication (WLAN and Bluetooth) a METTLER TOLEDO wireless dongle (MTICWD-100) is needed; WLAN and Bluetooth are only listed in the menu, when the wireless dongle is connected to the balance. Please contact your METTLER TOLEDO-sales representative for more information.

For installing and configuring a LAN/WLAN you need to have basic knowledge of TCP/IP-based networks and of network technology in general. If necessary, contact the network administrator of your IT department or your IT support.

Note

While WLAN and Bluetooth can be activate simultaneously, LAN and WLAN are exclusive. E.g., when switching WLAN on, an existing LAN connection is switched off automatically.

The section has the following sub-sections:

- **LAN**
- **WLAN**
- **Bluetooth**

LAN

Ethernet interface for connecting the instrument to a TCP/IP network. The most simple network can be implemented by connecting the instrument directly to the PC with a cross-over cable (RJ45 socket).

We recommend to use the default setting DHCP (automatic network settings).

The following options can be set:

Parameter	Description	Values
Configuration mode	Defines the parameter for the WLAN connection. **DHCP** = the parameters for the Ethernet connection will be automatically set. **Manual** = the options for the Ethernet connection must be set manually by the user.	DHCP* I Manual
IP address	If the IP is not to be automatically obtained, you can enter it here.	000.000.000.000 … 255.255.255.255
Subnet	Defines the subnet mask that is used by the TCP/IP protocol to determine whether a host is on the local subnet or on a remote network.	000.000.000.000 … 255.255.255.255
Standard Gateway	Defines the address of the standard gateway that links the host's subnet to other networks.	000.000.000.000 … 255.255.255.255
MAC-Address	Information on the MAC address (Media Access Control) that is used to uniquely identify the balance in the network.	not selectable

* Factory setting

Connecting LAN automatically (DHCP)

- Balance is connected via a Ethernet cable to the LAN.

1 Tap **LAN**.
   ➡ The screen **LAN** appears.

2 Tap **ON** to activate **LAN** and confirm with ✓.
   ➡ LAN connection is established.

WLAN

The following options can be set:

Parameter	Description	Values
No network connected	Select a network or search for a non-visible one. Please repeat the network search, if the network you are looking for is not listed initially.	
Configuration mode	Defines the parameter for the WLAN connection. **DHCP** = the parameters for the Ethernet connection will be automatically set. **Manual** = the options for the Ethernet connection must be set manually by the user.	DHCP* I Manual
IP address	If the IP is not to be automatically obtained, you can enter it here.	000.000.000.000 … 255.255.255.255
Subnet	Defines the subnet mask that is used by the TCP/IP protocol to determine whether a host is on the local subnet or on a remote network.	000.000.000.000 … 255.255.255.255
Standard Gateway	Defines the address of the standard gateway that links the host's subnet to other networks.	000.000.000.000 … 255.255.255.255
MAC-Address	Information on the MAC address (Media Access Control) that is used to uniquely identify the balance in the network.	not selectable

Bluetooth

The following options can be set:

Parameter	Description	Values
Bluetooth identification	With this identification the balance is shown to other Bluetooth devices.	Freely configurable (balance model name*)
Secure mode	Activates or deactivates the secure mode.	ON* I OFF

* Factory setting

- Wireless dongle MTICWD-100 is connected to USB Host interface.

1 Tap **Bluetooth**.
   ➡ The screen **Bluetooth** appears.

2 Tap **ON** and confirm with .
   ➡ The screen **Network and Bluetooth** appears.

➡ **Bluetooth** is available.

5.2.5 System settings

Navigation: > General configuration > System settings

This section describes the procedure for adapting the balance to suit specific requirements.

The following options can be set:

Parameter	Description	Values
Date and Time	Sets the time format and the date. The format can be selected by tapping ⌄.	Time: 24:MM* I 12:MM I 24.MM I 12.MM Date: DD.MM.YYYY* I D.MMM YYYY I MM/DD/YYYY I MMM DD YYYY I YYYY-MM-DD I YYYY/MM/DD
Balance identification	Defines a balance identification. By default the balance identification consists of the balance model and the serial number.	Values can be defined individually.
Sleep mode	Activates or deactivates the screen saver.	ON* I OFF
	Determines when the screen saver appears with date and time. Tap on the screen to exit the screen saver.	After 30 seconds After 1 minute After 2 minutes After 5 minutes After 10 minutes*
Backlight OFF	Activates or deactivates the display turns off.	ON I OFF*
	Determines when the display turns off. Tap the screen to end Backlight OFF mode.	After 30 seconds After 1 minute After 2 minutes After 5 minutes After 10 minutes
Quick wake up	Terminates **Sleep mode** and/or **Backlight OFF**. By placing the sample on the weighing pan, the **Sleep mode** and/or **Backlight OFF** will be terminated.	ON* I OFF
Out of level notification	Activates or deactivates the function **Out of level notification**.	ON* I OFF
Service due notification	Activates or deactivates the function **Service due notification**.	ON* I OFF

* Factory setting

If **Sleep mode** and **Backlight OFF** have the same value, the screen saver briefly appears before the backlight switches off.

Advanced options

The following options can be set:

Parameter	Description
Reset balance…	Resets the balance to factory settings.
Backup and restore…	Generates a backup of the current balance settings (excluding MinWeigh, service due notification and ISO-Log). To execute a backup, an external storage device (USB memory stick, FAT32) must be connected to the USB host (type A). Additionally, if an external storage device (USB memory stick, FAT32) is attached with a back-up file, it can be restored. We do not recommend to back-up/restore balance settings between approved and non-approved balance models.

Software update…	Activates or deactivates the option to update the balance software. The balance software can be updated by a METTLER TOLEDO service technician only.	ON* I OFF
Communication OFF…	Activates or deactivates communication from/to the balance via any interface except the touch display. If turn off, any device connected to as well as any service/function using any balance interface will not be available for usage anymore, e.g., Printer, Backup/Restore function. Network and Bluetooth-, Devices- and Publishing settings will not be available anymore.	

Note

By resetting the balance, any changes to the general settings and contextual settings that have been made along with any temporary collected data, e.g., paused applications or statistics will be lost.

5.2.6 User management

Navigation: ⚙ > General configuration > User management

In the section **User management** rights for users and user groups can be defined. User management simplifies operations by customizing the user interface according the requirements of every user. Additionally, it helps in regulatory environments that actions and results on a device can be traced to the individual user. If user management is activated, access to the system is user-specific (user logon). The access to the system can be protected by a password. Create up to 10 users and assign them a previously defined access authorization (group). According the access authorization only the relevant information is shown to a specific user. After switching on the balance, the user must login with the password, depending on the settings. The user must logout to switch off.

1 Tap **User management**.

➡ The screen **User management – General** appears.

2 Activate the **User management** and confirm with ✓.

3 Tap ✓ to return to the **General configuration** screen.

The section **User management** is divided into the following sub-sections:

- **User management – General** defines general settings for all user profiles, see [General ▸ Page 47].
- **User management – Groups** defines the settings for the user groups, see [Groups ▸ Page 48].
- **User management – User (1)** defines the settings for a single users, see [Users ▸ Page 49].

User password

The user password can be defined by the user. The length of the configurable user password is restricted to 12 digits.

What if you forget the password?

If you forget or lose the password, please ask the user with the administrator rights to provide you a new password. If also the administrator forgets or loses its password, please contact a METTLER TOLEDO representative. For more information please tap on the "?" icon on the **Login** – **User** screen of the administrator and generate an email with the relevant information by tapping on the ✉ on the right.

5.2.6.1 General

Navigation: ⚙ > General configuration > User management > User management – General

In this section you can activate the **Auto Lock** function to block access to the work area for the currently logged in user after a certain time of inactivity or a specific balance condition.

1 Tap **User management**.

➡ The screen **User management – General** appears.

2 Activate the **User management**.

3 Tap **Auto Lock**.

➡ The screen **Auto Lock** appears.

4 Activate **Auto Lock**.

5 If necessary, change the conditions, when **Auto Lock** is activated (after a certain time, **On Sleep**, **On Backlight OFF**) and confirm with ✓.

The following options can be set:

Parameter	Description	Values
Auto Lock	Activates or deactivates the automatic lock access to work area. Defines the screen lock time.	ON I OFF* After…* I On Sleep I On Backlight OFF

* Factory setting

5.2.6.2 Groups

Navigation: ⚙ > General configuration > User management > User management – Groups

In this section the access rights of the different user groups can be defined. While the access rights of the Administrators group are fix, the access rights for the Operators group can be changed. By customizing the available functions and settings for each user group, the complexity for the user can be reduced and the ease-of-use, productivity and process security can be increased.

The following 2 groups with different pre-defined access rights and group properties are available:

- **Administrators**
- **Operators**

Group properties

1 Tap **User management**.

➡ The screen **User management – General** appears.

2 Tap .

➡ The screen **User management – Groups** appears.

3 Tap, e.g., **Operators**.

4 If necessary, edit the group parameter and confirm with ✓.

5 Tap ✓ to return to the **User management – Groups** screen.

Access rights - Activities

For the Administrator group, all available rights are activated by default and cannot be changed.

The following options can be set:

Parameter	Description	Values
Run applications (All)	Defines which of the available applications the group can access and execute. Values can be ☐ (deactivated) or ☑ (activated)*.	Weighing* I Counting* I Check weighing* I Formulation* I Totaling* I Back-weighing* I Dynamic weighing* I Percent weighing * I Density* I Factor weighing*
Run adjustments (All)	Activates or deactivates the adjustments. Enables the group to access and execute all available adjustments. Values can be ☐ (deactivated) or ☑ (activated)*.	ON* I OFF
Run tests (All)	Activates or deactivates the tests. Enables the group to access and execute all available tests. Values can be ☐ (deactivated) or ☑ (activated)*.	ON* I OFF
Configure applications	Configure the applications. Enables the group to access and edit the contextual settings of the application. The group has the right to access and execute. Values can be ☐ (deactivated) or ☑ (activated)*.	ON* I OFF Main configuration* I Reports* I Statistics*
Configure adjustments	Configure the adjustments. Enables the group to access and change the settings of adjustments. Values can be ☐ (deactivated) or ☑ (activated)*.	ON* I OFF
Configure tests	Configure the tests. Enables the group to access and change the settings of tests. Values can be ☐ (deactivated) or ☑ (activated)*.	ON* I OFF

* Factory setting

Access rights – Settings

The Administrator group have all rights activated by default.

Parameter	Description	Values
Quick settings/ Preferences	Activates or deactivates the access to the quick settings/ preferences. Values can be ☐ (deactivated) or ☑ (activated)*.	ON* I OFF
Weighing options	Activates or deactivates the access to the weighing options. Values can be ☐ (deactivated) or ☑ (activated)*.	ON* I OFF
Publishing	Activates or deactivates the access to the publishing settings. Values can be ☐ (deactivated) or ☑ (activated)*.	ON* I OFF
Devices and services	Activates or deactivates the access to the device and service settings. Values can be ☐ (deactivated) or ☑ (activated)*.	ON* I OFF
Network and Bluetooth	Activates or deactivates the access to the network and Bluetooth settings. Values can be ☐ (deactivated) or ☑ (activated)*.	ON* I OFF
System settings Standard	Activates or deactivates the access to the standard system settings. Values can be ☐ (deactivated) or ☑ (activated)*.	ON* I OFF
System settings Advanced	Activates or deactivates the access to advanced system settings. Values can be ☐ (deactivated) or ☑ (activated)*.	ON* I OFF
User management	Activates or deactivates the access to the user management settings. Values can be ☐ (deactivated) or ☑ (activated)*.	ON* I OFF
ISO-Log	Activates or deactivates the access to the ISO-Log. Values can be ☐ (deactivated) or ☑ (activated)*.	ON* I OFF

* Factory setting

Editing a group

1 Tap **User management**.
   ➡ The screen **User management – General** appears.
2 Tap .
   ➡ The screen **User management – Groups (4)** appears.
3 Tap, e.g., **Operators**.
4 Edit the group parameter (see table above) and confirm with ✓.
5 Tap ✓ to return to the **User management – Groups (4)** screen.

5.2.6.3 Users

Navigation: > General configuration > User management > User management – User (1)

In this section, you can create, edit or delete user accounts and set a user password. Password protection is deactivated by default.

Create a user

1 Tap **User management**.
   ➡ The screen **User management – General** appears.
2 Tap .
   ➡ The screen **User management – User (1)** appears.
3 Tap [+].

➡ The screen **User name** appears.

4 Enter a name and confirm with ✓.

➡ The screen **Assigned group** appears.

5 Select a configuration of the access rights by tapping, e.g., **Operators** and confirm with ✓.

➡ The screen **Password** appears.

6 If necessary, activate the password and confirm with ✓.

➡ The screen **New password** appears.

7 Enter the password and confirm with ✓.

➡ The screen **Confirm password** appears.

8 Enter the password again and confirm with ✓.

➡ The screen **Password defined** appears.

9 Tap ✓ to confirm.

➡ The new user is displayed in the user management.

10 Tap ✓ to return to the **User management – General** screen.

The following options can be set:

Parameter	Description	Values
User name	Displays or changes the name of the logged in user.	any (1 … 12 chars)
Assigned group	Displays the group assignment.	not selectable
Password	Activates or deactivates the password.	ON I OFF*

* Factory setting

Editing a user

1 Tap **User management**.

➡ The screen **User management – General** appears.

2 Tap 👤.

➡ The screen **User management – User (1)** appears.

3 Select the user you want to edit by tapping.

4 If necessary, change the assigned group, password or user name and confirm with ✓.

5 Tap ✓ to return to the **User management – User (1)** screen.

Deleting a user

Note

The user **Administrators** and the currently active user cannot be deleted.

1 Tap **User management**.

➡ The screen **User management – General** appears.

2 Tap 👤.

➡ The screen **User management – User (1)** appears.

3 Tap [−].

➡ The screen **Remove users** appears.

4 Select the user you want to delete by tapping.

➡ The screen **Confirm remove** appears.

5 Tap ✓ to return to the **User management – User (1)** screen.

➡ The screen **User management – User (1)** appears.

Activate password

Activate the password for the administrator and/or user.

1 Tap **User management**.

➡ The screen **User management – General** appears.

2 Tap 👤.

➡ The screen **User management – User (1)** appears.

3 Select, e.g., **Administrator** by tapping.

➡ The screen **Administrator** appears.

4 Tap **Password**.

➡ The screen **Password** appears.

5 Activate **Password** and confirm with ✓.

6 Enter the password and confirm with ✓.

➡ The screen **Confirm password** appears.

7 Enter the password again and confirm with ✓.

➡ The screen **Password defined** appears.

8 Tap ✓ to confirm.

9 Tap ✓ to return to the **User management – User (1)** screen.

➡ The screen **User management – User (1)** appears.

10 Tap ✓ to return to the **User management – General** screen.

5.2.6.4 User login / lock / logout

Navigation: ⚙ > General configuration > User management > User management – User (1)

If the user password is activated, the user must login with the defined password. To release the balance for a different user, the user needs to logout first. Please be aware that the data and results generated by a specific user are not saved after a logout.

5.2.6.4.1 Login

There are different starting points to login to your user account.

Another user is still active and the screen is not locked

- User management is activated.
- Users are defined.
- Application screen appears.

1 Press and hold ⏻ until the dialog screen appears.

➡ The screen **Quit balance** appears.

2 Tap **Logout** (logged in user).

➡ The screen **Logout** appears.

3 Tap ✓ to confirm.

➡ The screen **Login – User (4)** appears.

4 Select the user, e.g., **LEA** by tapping.

➡ The application screen appears directly or after the password of the user LEA is entered. LEA is the logged in user.

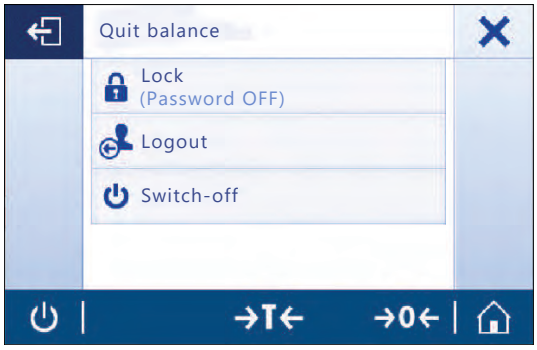

Another user is still active and the screen is locked

- User management is activated.
- The screen is locked (either manually by the user or automatic as **Auto Lock** is activated).
- Users are defined.
- Screen with logged in user appears.

1 Tap anywhere on the screen or the terminal bar to unlock.
   - ➡ The application screen appears.
   - ➡ If the currently logged in user is protected by a password, the **Password** screen appears.

2 Tap 👤.
   - ➡ The screen **Login – User (4)** appears.
   - ➡ If the currently logged in user is not protected by a password the application screen appears.

3 Press and hold ⏻ until the dialog screen and follow the instructions as explained in the chapter logout later in this chapter.
   - ➡ The screen **Login – User (4)** appears.

4 Select the user, e.g., **LEA** by tapping.
   - ➡ The application screen appears directly or after the password of the user LEA is entered. LEA is the logged in user.

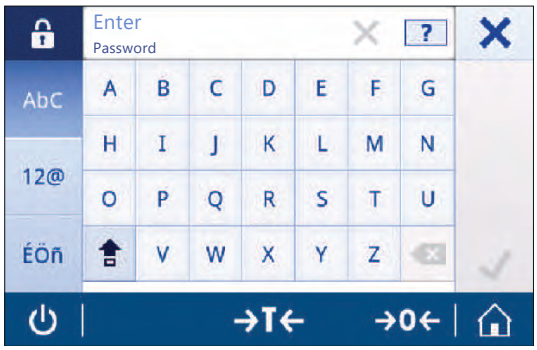

No user is active and the login screen appears

- User management is activated.
- Users are defined.
- Screen with **Login – User (4)** appears.

– Tap, e.g., **LEA**.
   - ➡ The application screen appears. LEA is the logged in user.

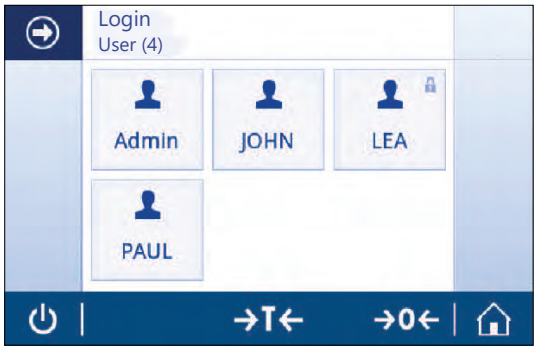

5.2.6.4.2 Lock

With the lock function the access to the work area of the current user is blocked. The lock function can be activated either automatically, see **Auto Lock** [General ▸ Page 47] for the configuration or can be activated manually anytime. Below the manual process is described.

- User is logged in.
- Screen with the logged in user appears.

1 Press and hold ⏻ until the dialog screen appears.

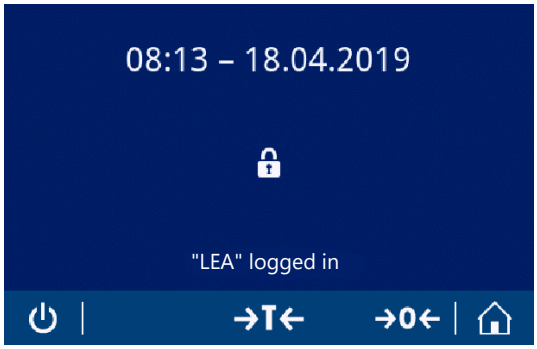

➡ The screen **Quit balance** appears.

2 Tap **Lock (Password OFF)**.

➡ The screen with the logged in users appears.

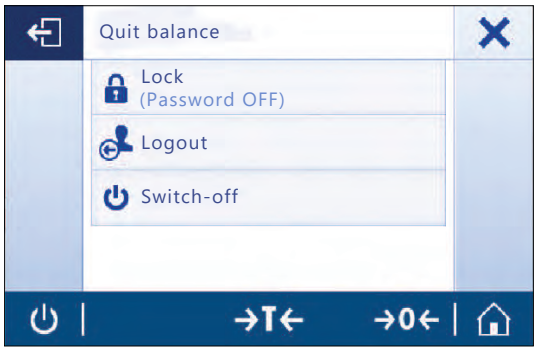

5.2.6.4.3 Logout

- User is logged in.

1 Press and hold ⏻ until the dialog screen appears.

➡ The screen **Quit balance** appears.

2 Tap, e.g., **Log out "LEA"** ("LEA" is the active logged in user).

➡ The screen **Logout** appears.

3 Tap ✓ to confirm.

➡ The screen **Login – User (4)** appears.

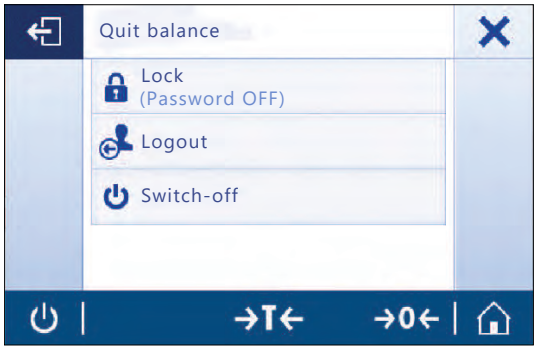

5.2.7 ISO-Log

Navigation: ⚙ > General configuration > ISO-Log

In this section, detailed information about adjustments already performed, intensity of use and settings can be displayed. ISO-log can store up to 999 events until the oldest one is overwritten.

1 Tap **ISO-Log**.

➡ The screen **ISO-Log** appears.

2 Tap, e.g., **ISO-Log – Adjustments**.

➡ The screen **ISO-Log – Adjustments** with all results appears.

3 Tap ← to return to the configuration screen.

4 Tap ← to return to the application home screen.

The following options can be set:

Parameter	Description
ISO-Log – Adjustments	Displays detailed information about adjustments already performed.
ISO-Log – Balance	Displays detailed information about the balance history.
ISO-Log – Settings and status	Displays detailed information about setting changes.
ISO-Log – Activity fails	Displays detailed information about communication errors.

6 Application Settings

Navigation: > Activities - Weighing applications

Each application can be defined manually via its application settings. Select the application and tap the application settings symbol in the upper left corner to define the application, e.g., % in the application **Percent weighing**.

The application settings can only be changed if no measurement is in progress.

The available options may differ depending on the application. Most applications have the following options:

- **Main configuration**
- **Reports configuration**
- **Statistics**

6.1 Main configuration

Navigation: > Activities - Weighing applications >

In this section, the current application can be defined individually. The available options may vary depending on the application.

More information about the available options can be found in the activities section.

6.2 Reports configuration

Navigation (example): > Activities - Weighing applications > Weighing > > Reports configuration

In this section, the report content can be configured. By default only the weighing value and the weight unit is published. Any additional information can be configured by the user.

The available options are model and country-specific and may vary depending on the application. The report configuration is valid independently of the report type. As far as possible the same content is published on a XML, CSV or TXT file or when printed on the strip printer. However, each report type has certain limitations.

Identifications

Define if and how task- and sample identifications are used by the application.

The following options can be set:

Parameter	Description	Values
Identifications	Activates or deactivates the identifications.	ON I OFF*
ID 1 … ID 4	Activates or deactivates **ID 1** … **ID 4** **ID 4** = for sample identification.	ON I OFF*
	Defines content and behavior of the single IDs. Activate Input prompt if you want to change the ID value for each result.	ID Label I ID Value I Autoincrement I Input prompt

Optional report data

Define additional information to be published in report printouts and report files.

The following options can be set:

Parameter	Description	Values
Title information	Activates or deactivates the title information.	ON I OFF*
	Defines if the application title, data and time appears on the report.	Report title I Date, time

Balance information	Activates or deactivates the balance information.	ON I OFF*
	Defines which balance information appears on the report.	Balance type I Balance identification I Software version I Serial number (SNR) I FACT status I Last adjustment
Task information	Activates or deactivates the task information.	ON I OFF*
	Defines which task information appears on the report.	Application parameters I MinWeigh parameters
Sample information	Activates or deactivates the sample information.	ON I OFF*
	Defines which sample information appears on the report.	Gross/Tare weight I Additional unit I Leveling status I Tolerance status
Footer	Activates or deactivates the footer.	ON I OFF*
	Defines which information appears in the footer.	Date, time I User name I Signature line I Empty lines

* Factory setting

Advanced options

The following options can be set:

Parameter	Description	Values
Print series	Activates or deactivates the print series.	ON I OFF*

* Factory setting

This option allows you to print a series of weight values using the same header and footer, e.g., header, sample 1, sample 2, sample 3, footer. The series starts with the printout of the first value and can be terminated at any time.

This option is only available for **Weighing**, **Counting**, **Check weighing**, **Dynamic weighing**, **Percent weighing** and **Factor weighing** applications and works only when publishing on a strip printer or generating a TXT file.

6.2.1 Working with IDs

Identifications (IDs) contain descriptive text for measurements, enabling samples to be easily allocated to specific tasks or customers. This feature defines identifications in order to be able comment on measurements, such as company ID, batch ID or sample ID.

Identifications must be defined under the application settings in **Reports configuration**. Usage and definition of the ID differ depending on the application for which the ID is used.

Identification dialog screen

The Identification dialog screen may vary slightly depending on the application for which the ID is used. The dialog screen always consists of two parts:

- The table with the ID definitions on the upper part of the screen.
- The **Workflow handling options** on the lower part of the dialog screen.

6.2.2 Defining an ID

The maximum length of an ID is 12 characters.

1 Open an application, e. g., **Weighing**.
2 Tap the application settings symbol in the upper left corner.
3 Tap **Reports configuration**.
4 Tap e.g., **Header**.
5 Tap **ID 1**.
   ➡ The input dialog **ID 1** appears. The input dialog is inactive.
6 Activate **ID 1** with the switch in the title bar.
   ➡ The input dialog **ID 1** is activated.
7 Define **ID 1 - Label**.
8 Tap ✓ to confirm.
9 Define **ID 1 - Value**.
10 Tap ✓ to confirm.
   ➡ The screen **ID 1** shows the values for **ID - Label** and **ID 1 - Value**.
11 Tap ✓ to accept the defined values.
   ➡ The screen **Header Reports configuration** appears the defined ID.
12 Tap ✓ to confirm.
   ➡ The screen **Header Reports configuration** appears.
13 Tap ✓ to confirm.

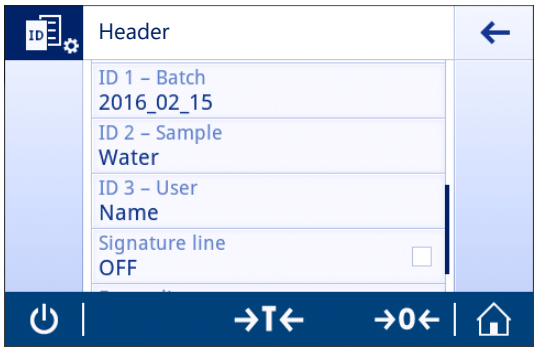

6.2.3 Workflow handling options

The workflow handling options differ depending on the application in which they are used. The following functions are available:

- **Autoincrement**
- **Input prompt**

Autoincrement

The function **Autoincrement** specifies that the last part of the ID is incremented with each use of that ID. There are two basic functions depending on how the ID is defined:

- If there is no counter in the ID, the system automatically adds a counter to the ID starting with 1 (e.g., the ID **Process** will be **Process1** in the next use).
- If a counter is part of the ID, the system automatically increments the ID starting at that counter (e.g., the ID **Process 1** will be **Process 2** in the next use).
- The counter must be set at the end of the ID, otherwise the system doesn't recognize the number as a counter (e.g. in **567Apple** the system doesn't recognize **567** as a counter).
- If the ID has no counter and a maximum length of 12 characters, the last few characters will be overwritten by the counter.

Input prompt

The **Input prompt** function can be used for every ID. If **Input prompt** is activated, the ID will be prompted on the display before it is used. The user can decide whether to use the default value that has been defined with the ID or define an individual value. The value can either be define with the keyboard on the touch screen, by reading in the information with a barcode reader or by attaching an external keyboard to the balance. For more information please refer to **Devices**.

6.3 Statistics

Navigation: ▦ > APPS Activities - Weighing applications > ▥

The **Statistics** function generates statistics for a series of results. The **Statistics** function is not available for the applications **Totaling** and **Formulation**.

The **Automatic** setting is used to automatically transfer the result to the statistics. If using the **Manual** setting, the + key must be pressed to transfer the result.

If there are more than 3 values from a series in the statistics, the result is also displayed as a Gaussian curve.

If statistics are activated, the following options are available during the weighing process:

- Finish and publish
- Pause
- View result
- Discard data

Statistics configuration

The following options can be set:

Parameter	Description	Values
Acceptance range	Defines the acceptable deviation in relation to the average value.	1%...100% (30%*)
Accepting mode	Defines if a weight sample is added automatically to the result.	Automatic I Manual*

* Factory setting

Stability criteria: Relationship between readability and deviation

Readability	Min. deviation
0.1 mg	0.1 g
0.001 g	1 g
0.01 g	1 g
0.1 g	1 g
1 g	5 g

Defining statistics

1 Open an application, e.g., **Weighing**.

2 Tap the main configuration symbol of the application, e.g., ⚖.

➡ The main configuration screen appears.

3 Tap ▥.

➡ The screen **Statistics** appears.

4 Activate the **Statistics**.

5 Define the available options.

6 Tap ✓ to confirm.

Discard value

If a weighing value was incorrect, it can be discarded from the result. Discard is only possible up to the last time the balance was tared.

1 Tap −.

➡ The dialog screen **Confirm discard** appears. An overview with all values within the current weighing process is displayed.

2 Tap ✓ to discard the last value from the result.

➡ The incorrect value has been deleted. The weighing process can be continued.

Terminate the application

1 Tap ■.

➡ A dialog screen appears.

2 Tap ✓ **Finish and publish**.

➡ The results are published according to the publishing configurations and the data are deleted.

➡ The application home screen appears.

Discard

All results are deleted.

1 Tap ■.

➡ A dialog screen appears.

2 Tap ✕ **Discard**.

➡ All data are deleted.

➡ The application home screen appears.

View result

1 Tap ■.

➡ A dialog screen appears.

2 Tap **View result**.

➡ The results are now displayed.

3 Tap to publish the results according to the configurations.

4 Tap ← to return to the previous screen.

7 Activities

Navigation:

The **Activities** section includes the following two sub-sections:

- **Activities - Weighing applications**
- **Activities - Adjustments and tests**

7.1 Activities - Weighing applications

Navigation: > Activities - Weighing applications

The landing screen does not show all applications. Scroll horizontally to reach the applications on the second page.

Activities - Weighing applications includes the following applications:

- **Weighing**, see Weighing and [Performing a simple weighing ▸ Page 25]
- **Counting**, see [Counting ▸ Page 63]
- **Check weighing**, see [Check weighing ▸ Page 67]
- **Formulation**, see [Formulation ▸ Page 70]
- **Totaling**, see [Totaling ▸ Page 72]
- **Back-weighing**, see [Back-weighing ▸ Page 75]
- **Dynamic weighing**, see [Dynamic weighing ▸ Page 78]
- **Percent weighing**, see [Percent weighing ▸ Page 80]
- **Density**, see [Density ▸ Page 81]
- **Factor weighing**, see [Factor weighing ▸ Page 83]

7.1.1 Weighing

Navigation

Activities > Activities - Weighing applications > Activities - Weighing applications

The **Weighing** application allows the user to perform simple weighing operations.

For more information about the basic weighing functions, see [Performing a simple weighing ▸ Page 25].

The statistics function can be activated; information on this topic can be found in [Statistics ▸ Page 58].

Weighing – Main configuration

The following options can be set:

Parameter	Description	Values
Main unit	Sets the main unit of the weighing process. The available units are model- and country-specific.	g* I kg I mg I µg I ct I N I lb I oz I ozt I GN I dwt I mom I msg I tlh I tls I tlt I tcl I tola I baht I lb:oz
Secondary information	Activates or deactivates the secondary information displayed on screen. **Additional unit*** Selects the secondary information displayed on screen. The available units are model- and country-specific. **Current tare** Current tare weight.	ON I OFF*
Readability	Defines the readability (d) of the weighing process. The available readabilities are model-specific.	1d - 0.0001 g* I 2d - 0.0002 g I 5d - 0.0005 g I 10d - 0.001 g I 100d - 0.01 g I 1000d - 0.1 g
MinWeigh	Activates or deactivates the **MinWeigh** function.	ON I OFF*
Target and tolerances	Defines the target weight and tolerances. **Target weight** Predefines a target weight. The value can be selected manually or by weighing. **Upper tolerance** Defines the upper tolerance. **Lower tolerance** Defines the lower tolerance. If the value for **Target weight**, **Upper tolerance** or **Lower tolerance** has been defined, the option title **Target and tolerances** will be replaced by the defined values.	ON I OFF* Numerical value (depending on the balance type)

* Factory setting

Setup the weighing application

1 Tap ⚖.

➡ The screen **Weighing – Main configuration** appears.

2 Tap e.g. **Main unit**.

➡ The screen **Main unit** appears.

3 Select the desired unit by tapping it.

4 Tap ✓ to confirm.

➡ The screen **Weighing – Main configuration** appears.

5 Tap ✓ to confirm the configuration.

7.1.2 Counting

Navigation: Activities > Activities - Weighing applications > Counting

The **Counting** application determines a specific number of pieces based on a predetermined reference piece weight.

There are two counting modes available: **Advanced** and **Standard**. With the additional features of **Advanced** mode, the entire process is more comfortable and more secure due to an automatic workflow. The mode can be changed in the section **Counting – Main configuration**. Default mode: **Advanced**.

The statistics function can be activated; information on this topic can be found in [Statistics ▸ Page 58].

Legal-for-trade

A fixed minimum reference piece number of 10 and inactive reference weight options are predetermined for approved balances for selected countries.

7.1.2.1 Counting - Main configuration

The following options can be set:

Parameter	Description	Values
Counting mode	Select the **Counting mode**.	Advanced* I Standard
Reference piece weight	Sets the number and weight of the reference piece(s).	1…999 (10*)
Secondary information	Activates or deactivates the secondary information displayed on screen. **Additional unit*** Selects the secondary information displayed on screen. The available units are model- and country-specific. **Current tare** Current tare weight.	ON* I OFF
Target and tolerances	Defines the target weight and tolerances. **Target weight** Predefines a target weight. The value can be selected manually or by weighing. **Upper tolerance** Defines the upper tolerance. **Lower tolerance** Defines the lower tolerance. If the value for **Target weight**, **Upper tolerance** or **Lower tolerance** has been defined, the option title **Target and tolerances** will be replaced by the defined values.	ON I OFF* Numerical value (depending on the balance type)

* Factory setting

Advanced mode options

The following options can be set:

Parameter	Description	Values
Reference mode	Selects the **Reference mode**. **Automatic** The next stable weight is automatically accepted as a reference weight according to the defined piece number. **Manual** The reference can be defined manually.	Automatic* I Manual

Auto clear reference	Activates or deactivates the **Auto clear reference**. The current value of the option **Reference piece weight** will be automatically deleted after zeroing or removing all loaded weights from the weighing pan.	ON I OFF*
Reference optimization	Activates or deactivates the **Reference optimization**. The current reference will be continuously optimized during operation by accepting additional pieces automatically or manually.	ON I OFF*
Reference check	Activates or deactivates the **Reference check**.	ON I OFF*
Accuracy information	Activates or deactivates the **Accuracy information**. Counting accuracy can be shown in percent (default mode) or piece(s).	ON I OFF*

* Factory setting

7.1.2.2 Defining reference piece weight in standard mode

To define the **Reference piece weight**, the **Reference piece number** and **Reference weight** must be successively defined. The system will automatically navigate from one option to the other.

Defining reference piece number

The reference piece number must be a number between 1 and 999.

1 Tap ⁂.
   ➡ The screen **Counting – Main configuration** appears.
2 Tap **Counting mode**.
   ➡ The screen **Counting mode** appears.
3 Activate **Standard**.
4 Tap ✓ to confirm.
5 Tap **Reference piece weight**.
   ➡ The dialog screen **Reference piece number** appears.
6 Tap ✕ to delete the value.
7 Enter the number of reference pieces.
8 Tap ✓ to confirm.
   ➡ The dialog screen **Reference weight** appears.

Defining the reference weight

There are two ways to define the reference weight. The reference weight can be defined manually by entering the value or weighing the reference weight.

Defining reference weight manually

1 Tap ✕ to delete the value.
2 Enter the new reference weight.
3 Tap ✓ to confirm.
   ➡ The reference piece weight has been defined.
4 Tap ✓ to confirm.

Defining the reference weight by weighing

1 Tap ⚖.
   ➡ A dialog screen appears.
2 Place the reference weight on the weighing pan.
3 Tap ✓ to confirm.
   ➡ The screen **Reference weight** appears.
4 Tap ✓ to confirm.
   ➡ The screen **Counting – Main configuration** appears.
5 Tap ✓ to confirm the configuration.

7.1.2.3 Defining reference piece weight in advanced mode

To define the **Reference piece weight**, the **Reference piece number** and **Reference weight** can be defined directly via the shortcuts.

Defining the reference piece number

The reference piece number must be a number between 1 and 999.

- Counting mode **Advanced** is activated.

1 Tap **1 piece** in the work title bar.
   ➡ A dialog screen appears.
2 Tap **Piece number**.
3 Tap ✕ to delete the value.
4 Enter the number of reference pieces.
5 Tap ✓ to confirm.
   ➡ The defined value for the option **Reference piece number** appears in the work title bar.

Defining the reference piece weight manually

1 Tap **Piece weight** in the work title bar.
   ➡ The screen **Reference piece weight** appears.
2 Tap ✕ to delete the value.
3 Enter the new value.
4 Tap ✓ to confirm.
   ➡ The defined value for the option **Reference piece weight** appears in the work title bar.

Defining reference piece weight by weighing

If no reference weight has been defined yet, the work title bar shows **Piece weight Not defined**.

1 Place the reference sample weight on the weighing pan.
2 Depending on whether the option **Reference mode** is set to **Automatic (Default)** or **Manual**, the value will be automatically accepted or must be confirmed.
   ➡ The balance returns to the application main screen and shows the defined value for the option **Reference piece weight** in the work title bar.

Once the reference weight has been defined in **Advanced** mode, it appears on the right side of the work title bar. The reference weight can be changed in **Main configuration** under **Reference piece weight** or using the shortcut on the left side of the work title bar.

Counting with reference weight check

The reference weight check ensures that the reference weight is high enough for the resulting counting accuracy to fit the customer process tolerance. Activate a reference weight check and define the process tolerance in percent. The percentage factor range is 0.01 - 30.00%. The higher the factor, the smaller the required minimum reference weight. Factory setting: 2%. The minimum reference weight is equal to d / factor.

Example

d = 0.1 g

Factor = 20%

Minimum reference weight = 0.1 g / 20% = 0.5 g

If the reference calculation is activated manually or automatically, the minimum reference weight is checked to ensure the desired accuracy. If it is not sufficient, the user is prompted to add the number of additional parts needed. The number of additional parts needed is reduced to zero, after which the user adds additional parts. At zero, the reference calculation is activated automatically. If too many parts are added, the user is prompted to remove the number of parts until zero is reached.

7.1.3 Check weighing

Navigation: Activities > Activities - Weighing applications > Check weighing

The **Check weighing** application allows the user to check the deviation of a sample weight within a tolerance limit against a reference target weight. The target weight can be determined manually or by weighing; the tolerance limit must be defined manually.

The statistics function can be activated; information on this topic can be found in [Statistics ▸ Page 58].

7.1.3.1 Check Weighing - Main configurations

Legal-for-trade

For approved balances, this menu item has fixed settings and cannot be changed.

The following options can be set:

Parameter	Description	Values
Target and tolerances	Defines the target weight and tolerances. **Target weight** Predefines a target weight. The value can be selected manually or by weighing. **Upper tolerance** Defines the upper tolerance. **Lower tolerance** Defines the lower tolerance. If the value for **Target weight**, **Upper tolerance** or **Lower tolerance** has been defined, the option title **Target and tolerances** will be replaced by the defined values.	Target weight | Upper tolerance | Lower tolerance Numerical value (depending on the balance type)
Tolerance threshold	Defines the tolerance threshold. Values below the defined threshold are not checked.	1%…100% (1%*)
Within tolerance beeps	Activates or deactivates the acoustic signal. Gives an acoustic signal when the result is within tolerance.	ON | OFF*
Main unit	Sets the main unit of the weighing process. The available units are model- and country-specific.	g* | kg | mg | µg | ct | N | lb | oz | ozt | GN | dwt | mom | msg | tlh | tls | tlt | tcl | tola | baht | lb:oz
Readability	Defines the readability (d) of the weighing process. The available readabilities are model-specific.	1d - 0.0001 g* | 2d - 0.0002 g | 5d - 0.0005 g | 10d - 0.001 g | 100d - 0.01 g | 1000d - 0.1 g

* Factory setting

7.1.3.2 Before performing check weighing

Before performing a check weighing operation, the following options can be set:

- **Target weight**
- **Upper tolerance limit**
- **Lower tolerance limit**
- **Tolerance threshold**

Defining the target weight manually by entering the nominal weight

1 Tap ✕/⚙.
   ➡ The screen **Check weighing - Main configuration** appears.
2 Tap **Target and tolerances**.
   ➡ The dialog screen **Target weight in g** appears.
3 Tap ✕ to delete the value.
4 Enter the value of the target weight.
5 Tap ✓ to confirm.
   ➡ The screen **Check weighing - Main configuration** appears.
6 Tap ✓ to confirm, and return to the application screen.

Defining the target weight by weighing

1 Tap ✕/⚙.
   ➡ The screen **Check weighing - Main configuration** appears.
2 Tap **Target and tolerances**.
   ➡ The dialog screen **Target weight in g** appears.
3 Tap ⬇.
   ➡ The dialog screen **Target weight in g** appears.
4 Place the reference weight on the weighing pan.
5 Tap ✓ to confirm.
   ➡ The dialog screen **Target weight in g** appears.
6 Tap ✓ to confirm.
   ➡ The screen **Check weighing - Main configuration** appears.
7 Tap ✓ to confirm, and return to the application screen.

Defining the lower and upper limits manually by entering a percentage value or weight

1 Tap ✕/⚙.
   ➡ The screen **Check weighing - Main configuration** appears.
2 Tap **Target and tolerances**.
   ➡ The dialog screen **Target weight in g** appears.
3 Tap ⬆ **Upper tolerance limit** or tap ⬇ **Lower tolerance limit**.
   ➡ The dialog screen **Upper tolerance in g** or **Lower tolerance in g** appears.
4 Activate the option using the switch at the upper right.
5 Tap ✕ to delete the value.
6 Enter the tolerance limit.
7 Tap ✓ to confirm.
   ➡ The screen **Check weighing - Main configuration** appears.
8 Tap ✓ to confirm, and return to the application screen.

Defining tolerance threshold

With the option **Tolerance threshold** a value limit can be set using the **Tolerance threshold** option. If the value of the check weight is below the defined threshold, it will not be checked.

1 Tap ✕✓⚙.
   ➡ The screen **Check weighing - Main configuration** appears.
2 Tap **Tolerance threshold**.
   ➡ The dialog screen **Tolerance threshold in %** appears.
3 Activate the option using the switch at the upper right.
4 Tap ✕ to delete the value.
5 Enter the value for the **Tolerance threshold**.
6 Tap ✓ to confirm.
   ➡ The screen **Check weighing - Main configuration** appears.
7 Tap ✓ to confirm, and return to the application screen.

The **Tolerance threshold** option always refers to the lower tolerance limit.

7.1.3.3 Performing check weighing

After defining the target weight and tolerance limits, the **Check weighing** application can be performed. The color weighing-in aid bar at the top bar indicates whether the weight sample is within the defined tolerances.

Example: the defined target weight is 100.0000 g and the tolerance limit is ±2.5%. The sample weight is 97.0000 g.

– Place the sample weight on the weighing pan.
   ➡ The weight is stable and the unstability symbol ○ disappears.
   ➡ The value is out of tolerance, and the weighing-in aid bar and weighing value field are red.

Example: the defined target weight is still 100.0000 g and the tolerance limit is ±2.5%. The sample weight is 99.0000 g.

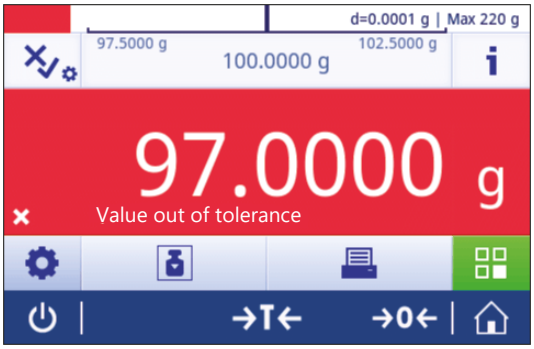

– Place the sample weight on the weighing pan.
   ➡ The weight is stable and the unstability symbol ○ disappears.
   ➡ The value is within the tolerance limit, and the weighing-in aid bar and weighing value field are green.

If the weight is below a defined tolerance threshold, the background color of the screen does not change.

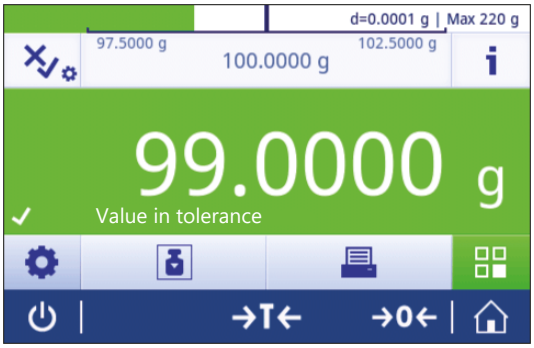

7.1.4 Formulation

Navigation: Activities > Activities - Weighing applications > Formulation

The **Formulation** application allows the user to:

- Weigh-in (add and store) up to 999 individual component weights without tare container and display the total.
- Tare/pre-tare and store up to 799 container weights and display the total.
- If tare containers need to be stored, the maximum number of permitted tares is 200.
- Fill up the sum of all component net weight values by adding a further component to a higher value.

Formulation – Main configuration

The following options can be set:

Parameter	Description	Values
Main unit	Sets the main unit of the weighing process. The available units are model- and country-specific.	g* I kg I mg I µg I ct I N I lb I oz I ozt I GN I dwt I mom I msg I tlh I tls I tlt I tcl I tola I baht I lb:oz
Readability	Defines the readability (d) of the weighing process. The available readabilities are model-specific.	1d - 0.0001 g* I 2d - 0.0002 g I 5d - 0.0005 g I 10d - 0.001 g I 100d - 0.01 g I 1000d - 0.1 g

* Factory setting

Performing formulation

1 Press →0← to zero the balance.

2 If using a container: place container on the weighing pan and press →T← to tare the balance.

➡ The status information field displays **Net**.

3 Place the first component weight.

➡ The weighing value field displays the value of the first component weight.

4 Tap + to add the first component weight.

5 Place the second component weight.

➡ The weighing value field displays the value of the second component weight.

6 Tap + to add the second component weight.

7 Continue adding components until all components are weighed.

Defining fill up function

Fill up sample allows an additional component weight to be added to the total weight of all components in order to reach a desired target weight.

■ The weighing value field displays the total net weight.

1 Tap .

➡ A dialog screen appears.

2 Place the fill up sample.

➡ The weighing value field displays the total weight.

3 Tap ✓ to confirm.

4 Tap ■ to exit the application or to view the result.

The following options are available during the weighing process:

- Finish and publish
- Pause
- View result
- Discard

Discard value

If a weighing value was incorrect, it can be discarded from the result. Discard is only possible up to the last time the balance was tared.

1 Tap ▬.
   ➡ The dialog screen **Confirm discard** appears. An overview with all values within the current weighing process is displayed.
2 Tap ✓ to discard the last value from the result.
   ➡ The incorrect value has been deleted. The weighing process can be continued.

Terminate the application

1 Tap ■.
   ➡ A dialog screen appears.
2 Tap ✓ **Finish and publish**.
   ➡ The results are published according to the publishing configurations and the data are deleted.
   ➡ The application home screen appears.

Pause the application

1 Tap ■.
   ➡ A dialog screen appears.
2 Tap ❚❚ **Pause**.
   ➡ The application is paused and another application can be used in the meantime.
   ➡ The application home screen appears.
3 Open the application again.
4 Tap ❚▶.
   ➡ The process can be continued.

View result

1 Tap ■.
   ➡ A dialog screen appears.
2 Tap **View result**.
   ➡ The results are now displayed.
3 Tap to publish the results according to the configurations.
4 Tap ← to return to the previous screen.

Discard

All results are deleted.

1 Tap ■.
   ➡ A dialog screen appears.
2 Tap × **Discard**.
   ➡ All data are deleted.
   ➡ The application home screen appears.

7.1.5 Totaling

Navigation: Activities > Activities - Weighing applications > ∑ Totaling

The **Totaling** application allows the user to weigh different samples, add their weight values and totalize them.

The application allows the user to:

- Tare/pre-tare and store up to 799 container weights and display the total.
- If tare containers need to be stored, the maximum number of permitted tare values is 200.

Totaling – Main configuration

The following options can be set:

Parameter	Description	Values
Accepting mode	Defines if a weight sample is added automatically to the result.	Automatic I Manual*
Main unit	Sets the main unit of the weighing process. The available units are model- and country-specific.	g* I kg I mg I µg I ct I N I lb I oz I ozt I GN I dwt I mom I msg I tlh I tls I tlt I tcl I tola I baht I lb:oz
Readability	Defines the readability (d) of the weighing process. The available readabilities are model-specific.	1d - 0.0001 g* I 2d - 0.0002 g I 5d - 0.0005 g I 10d - 0.001 g I 100d - 0.01 g I 1000d - 0.1 g

* Factory setting

Stability criteria: Relationship between readability and deviation

Readability	Min. deviation
0.1 mg	0.1 g
0.001 g	1 g
0.01 g	1 g
0.1 g	1 g
1 g	5 g

Performing totaling

1 Press →0← to zero the balance.
2 If using a container, place container on the weighing pan and press →T← to tare the balance.
3 Place the first sample on the weighing pan.
4 Wait until the unstability symbol ○ disappears.
   ➡ When the balance is stable, the weighing value becomes dark blue.
5 Tap + to accept the weight and start the procedure.
6 Place the next sample.
7 Tap + to accept the second sample weight.
   ➡ The work title bar shows the number of samples (2 samples) and the total weight of the samples, e.g., ∑ = 30.0000 g.

The following options are available during the weighing process:

- Finish and publish
- Pause
- View result
- Discard

Discard value

If a weighing value was incorrect, it can be discarded from the result. Discard is only possible up to the last time the balance was tared.

1 Tap −.
   ➡ The dialog screen **Confirm discard** appears. An overview with all values within the current weighing process is displayed.
2 Tap ✓ to discard the last value from the result.
   ➡ The incorrect value has been deleted. The weighing process can be continued.

Terminate the application

1 Tap ■.
   ➡ A dialog screen appears.
2 Tap ✓ **Finish and publish**.
   ➡ The results are published according to the publishing configurations and the data are deleted.
   ➡ The application home screen appears.

Pause the application

1 Tap ■.
   ➡ A dialog screen appears.
2 Tap ❚❚ **Pause**.
   ➡ The application is paused and another application can be used in the meantime.
   ➡ The application home screen appears.
3 Open the application again.
4 Tap ❚▶.
   ➡ The process can be continued.

View result

1 Tap ■.
   ➡ A dialog screen appears.
2 Tap **View result**.
   ➡ The results are now displayed.
3 Tap to publish the results according to the configurations.
4 Tap ← to return to the previous screen.

Discard

All results are deleted.

1 Tap ■.

➡ A dialog screen appears.

2 Tap × **Discard**.

➡ All data are deleted.

➡ The application home screen appears.

7.1.6 Back-weighing

Navigation: Activities > Activities - Weighing applications > Back-weighing

The balance displays and prints the automatically calculated difference of 2 measured weights. Automatic (default) and manual modes are possible. The use of a tare container can be activated (default) or deactivated. As result, the tare, initial weight, final weight and difference can be displayed and printed. The difference can be displayed and printed as absolute values (in main units), percentage (%), percentage (Abs. %), Atro AM, or Atro AD.

The statistics function can be activated; information on this topic can be found in [Statistics ▸ Page 58].

If there are no function statistics, the following options are available during the weighing process:

- Finish and publish
- Pause
- View result
- Discard

Back-weighing – Main configuration

The following options can be set:

Parameter	Description	Values
Accepting mode	Defines if a weight sample is added automatically to the result. The next stable weight of at least 10 * readability is accepted following minimal deviation; see relationship between readability and deviation in the table below.	Automatic* I Manual
Use tare container	Activates or deactivates the use of a tare vessel.	ON* I OFF
Result value as…	Select the result view for the calculated difference. **Percentage** = Reports the difference between back-weighing and initial weighing as a percentage of the initial weight. **Absolute percentage** = Reports the back-weighing as a percentage of the initial weight. **Moisture content** = Reports the moisture content of the sample as a percentage of the dry weight. **Dry content** = Reports the wet weight of the sample as a percentage of the dry weight.	Weight (Default)* I Percentage I Absolute percentage I Moisture content I Dry content
Result decimals	Defines the number of decimal places of the percentage (option only available if % result is activated).	1 I 2 I 3* I 4 I 5
Show difference…	Displays the calculated difference in work area and result view. **Signed (Default)** = Displays the value via algebraic sign. **Unsigned** = Displays the absolute value.	Signed (Default)* I Unsigned
Main unit	Sets the main unit of the weighing process. The available units are model- and country-specific.	g* I kg I mg I µg I ct I N I lb I oz I ozt I GN I dwt I mom I msg I tlh I tls I tlt I tcl I tola I baht I lb:oz
Readability	Defines the readability (d) of the weighing process. The available readabilities are model-specific.	1d - 0.0001 g* I 2d - 0.0002 g I 5d - 0.0005 g I 10d - 0.001 g I 100d - 0.01 g I 1000d - 0.1 g

* Factory setting

Stability criteria: Relationship between readability and deviation

Readability	Min. deviation
0.1 mg	0.1 g
0.001 g	1 g
0.01 g	1 g
0.1 g	1 g
1 g	5 g

Setting up the back-weighing application

1 Tap ⚠⚙.
   ➡ The screen **Back-weighing – Main configuration** appears.
2 Tap **Accepting mode**.
   ➡ The screen **Accepting mode** appears.
3 Select **Automatic (Default)** or **Manual** and confirm with ✓.
4 Activate the option **Use tare container** if required.
5 Tap **Result value as...**.
   ➡ The screen **Result value as...** appears.
6 Select the values for the result view, e.g., **Percentage (%)** and the print-out.
7 Tap ✓ to confirm.
8 Tap **Result decimals** after percent value.
   ➡ The screen **Result decimals** appears.
9 Select the number of decimals for the difference in % and confirm with ✓.
10 Tap ✓ to return to the application screen.

Performing back-weighing with automatic accept mode and using a tare container

- **Use tare container** is activated.
- **Accepting mode Automatic** is selected.

1 Place a container on the weighing pan.
   ➡ The tare weight appears in the work title bar.
2 Place the initial sample in the container.
   ➡ The initial weight appears in the value bar.
3 Remove the container with the sample.
4 Place the container with the treated sample on the weighing pan.
   ➡ The final weight appears in the value bar.
5 Remove the container with the sample.
   ➡ The back-weighing result will be displayed and can be published according to the publishing configurations.
6 Tap ✓ to return to the application screen.

Performing back-weighing with manual accept mode without using a tare container

- **Use tare container** is deactivated.
- **Accepting mode Manual** is selected.

1 Place the initial sample on the weighing pan.
   ➡ The initial weight appears in the value bar.
2 Tap ✓ to confirm.
3 Remove the sample to continue.
4 Place the treated sample on the weighing pan.
   ➡ The final weight appears in the value bar.
5 Tap ✓ to confirm.
6 Push checkmark to access the result report.
   ➡ The back-weighing result will be displayed and can be published according to the publishing configurations.
7 Tap ✓ to return to the application screen.

7.1.7 Dynamic weighing

Navigation: Activities > Activities - Weighing applications > Dynamic weighing

The **Dynamic weighing** application determines the weights of unstable samples or when the weighing process is being executed under unstable ambient conditions. The balance calculates the weight as an average of a number of weighing operations over a defined time.

The statistics function can be activated; information on this topic can be found in [Statistics ▸ Page 58].

The displayed measuring time on the application home screen can be used as shortcut to define the measuring time.

Dynamic weighing – Main configuration

The following options can be set:

Parameter	Description	Values
Measuring time	Defines the measuring time in seconds.	3…120 (3 seconds*)
Start mode	Defines the **Start mode**.	Automatic* I Automatic With time delay I Manual
Main unit	Sets the main unit of the weighing process. The available units are model- and country-specific.	g* I kg I mg I µg I ct I N I lb I oz I ozt I GN I dwt I mom I msg I tlh I tls I tlt I tcl I tola I baht I lb:oz
Readability	Defines the readability (d) of the weighing process. The available readabilities are model-specific.	1d - 0.0001 g* I 2d - 0.0002 g I 5d - 0.0005 g I 10d - 0.001 g I 100d - 0.01 g I 1000d - 0.1 g
Secondary information	Activates or deactivates the secondary information displayed on screen. **Additional unit*** Selects the secondary information displayed on screen. The available units are model- and country-specific. **Current tare** Current tare weight.	ON I OFF*

* Factory setting

Defining measuring time

1 Tap .
   ➡ The screen **Dynamic weighing – Main configuration** appears.
2 Tap **Measuring time**.
   ➡ The dialog screen **Measuring time in seconds** appears.
3 Tap × to delete the value.
4 Enter a value between 3 and 120 seconds.
5 Tap ✓ to confirm.
   ➡ The screen **Dynamic weighing – Main configuration** appears.
6 Tap ✓ to confirm.

Defining start mode

1 Tap ∿⚙.
2 Tap **Start mode**.
3 Select **Automatic***, **Automatic With time delay** or **Manual**.
4 Tap ✓ to confirm.
5 Tap ✓ to return to the application screen.

Performing dynamic weighing

When the measuring time and the start mode have been defined, the dynamic weighing process can be started.

The weighing process will automatically be aborted when an overload or underload is detected.

1 Press →**0**← to zero the balance.
2 If using a container: place container on the weighing pan and press →**T**← to tare the balance or use the "Weighing option" menu [Auto tare ▸ Page 34].
3 Place sample weight.
   - ➡ If **Start mode** is set to **Automatic**, the weighing process starts automatically with relative stability.
   - ➡ If **Start mode** is set to **Automatic With time delay**, the weighing process starts automatically after 3 seconds.
   - ➡ It **Start mode** is set to **Manual**, tap ▶ to start the weighing process.
   - ➡ The weighing process starts. The defined measuring time in the work title bar is counting down.

➡ The result is displayed in a blue weighing value field.

7.1.8 Percent weighing

Navigation: Activities > Activities - Weighing applications > % Percent weighing

Percent weighing allows a sample weight to be checked as a percentage of a reference target weight.

The statistics function can be activated; information on this topic can be found in [Statistics ▸ Page 58].

Percent weighing – Main configuration

The following options can be set:

Parameter	Description	Values
Reference weight	Defines the reference weight manually or by weighing.	Available range is model-specific.
Secondary information	Activates or deactivates the secondary information displayed on screen. **Additional unit*** Selects the secondary information displayed on screen. The available units are model- and country-specific. **Current tare** Current tare weight.	ON* I OFF

* Factory setting

Defining the reference weight

There are two ways to define the reference weight. The reference weight can be defined manually by entering the value or weighing the reference weight.

Defining the reference weight by weighing

1 Tap %.
   ➡ The screen **Percent weighing – Main configuration** appears.
2 Tap **Reference weight**.
   ➡ The screen **Reference weight** appears.
3 Tap .
4 Press →0← to zero the balance.
5 Place the reference weight on the weighing pan.
6 Tap ✓ to confirm.
   ➡ The screen **Reference weight** appears.
7 Tap ✓ to confirm.
8 Tap ✓ to return to the application screen.

Defining the reference weight manually

1 Tap %.
   ➡ The screen **Percent weighing – Main configuration** appears.
2 Tap **Reference weight**.
   ➡ The screen **Reference weight** appears.
3 Tap × to delete the value.
4 Enter the value of the reference weight and confirm with ✓.
5 Tap ✓ to return to the application screen.

7.1.9 Density

Navigation: Activities > Activities - Weighing applications > Density

Density allows the density of solid bodies and liquids to be determined.

The density is determined via the Archimedes principle, according to which a body immersed in a fluid undergoes an apparent loss in weight which is equal to the weight of the fluid it displaces.

To determine the density of solid bodies, we recommend using the optional density kit, which contains all attachments and aids needed for convenient and precise density determination. To determine the density of liquids, a sinker is also required. This can be obtained from your METTLER TOLEDO dealer.

The statistics function can be activated; information on this topic can be found in [Statistics ▸ Page 58].

Density – Main configuration

The following options can be set:

Parameter	Description	Values
Method	Depending if the weight type is solid or liquid.	Solid* I Liquid
Auxiliary liquid	Select the auxiliary liquid.	H2O* I Ethanol I Free…
Sinker volume	This option is only available when **Liquid** is active.	(0.1…500.0 cm^3)
Result decimals	Defines the number of decimal places density in g/cm^3.	1 I 2 I 3* I 4 (depending on the balance type)
Main unit	Sets the main unit of the weighing process. The available units are model- and country-specific.	g* I kg I mg I µg I ct I N I lb I oz I ozt I GN I dwt I mom I msg I tlh I tls I tlt I tcl I tola I baht I lb:oz

* Factory setting

Determination of density of solids

1 Tap .
   ➡ The screen **Density – Main configuration** appears.
2 Tap **Method**.
   ➡ When **Solid** has been activated (default value), the **Auxiliary liquid** appears in the list.
3 Tap **Auxiliary liquid**.
   ➡ The screen **Auxiliary liquid** appears.
4 Define the **Auxiliary liquid** that is used. Select between **H2O** for distilled water, **Ethanol** or **Free...** for a freely definable auxiliary liquid.
5 Tap ✓ to confirm.
   ➡ The selected **Auxiliary liquid** defines the next steps:
   ➡ The dialog screen **Temperature in °C** appears.
6 Enter the **Temperature in °C** for **Ethanol** and **H2O**.
7 **Auxiliary liquid name** and **Density in g/cm3** must be defined for the option **Free...**.
8 Tap ✓ to confirm.
   ➡ The screen **Density – Main configuration** appears.
9 Tap ✓ to return to the application screen.
   ➡ The balance is prepared for determining the density of solids.

Determining the density for solids

- The balance has been configured to determine the density of solids.

1 Tap ▶ to start the process.
   ➡ The dialog screen **Sample weight in air** appears.
2 Place the solid mass on the weighing pan.
3 Tap ✓ to confirm.
   ➡ The dialog screen **Sample weight in liquid** appears.
4 Immerse solid in the liquid.
5 Tap ✓ to confirm.
   ➡ The results are now displayed.
6 Tap 🖶 to publish the results according to the configurations.
7 Tap ✓ to return to the application screen.

Determination of density for liquids

1 Tap .
   ➡ The screen **Density – Main configuration** appears.
2 Tap **Method**.
3 Tap **Liquid**.
4 Tap ✓ to confirm.
   ➡ When **Liquid** has been activated, **Sinker volume** appears in the list.
5 Tap **Sinker volume**.
   ➡ The dialog screen **Sinker volume in cm³** appears.
6 Tap ✕ to delete the value.
7 Enter the volume of the sinker.
8 Tap ✓ to confirm.
   ➡ The screen **Density – Main configuration** appears.
9 Tap ✓ to return to the application screen.

Determining the density of liquids

- The balance has been configured to determine the density of liquids.

1 Tap ▶ to start the process.
   ➡ The dialog screen **Sinker in air** appears.
2 Place the sinker on the weighing pan.
3 Tap ✓ to confirm.
   ➡ The dialog screen **Sinker in liquid** appears.
4 Immerse the sinker.
5 Tap ✓ to confirm.
   ➡ The results are now displayed.
6 Tap 🖶 to publish the results according to the configurations.
7 Tap ✓ to return to the application screen.

7.1.10 Factor weighing

Navigation: Activities > Activities - Weighing applications > Factor weighing

The application **Factor weighing** multiplies or divides a pre-defined factor by the measured weight value (in grams) and calculates it to a predefined number of decimal places.

The permitted range for the steps depends on the pre-defined factor and the resolution of the balance.

The statistics function can be activated; information on this topic can be found in [Statistics ▸ Page 58].

Factor weighing – Main configuration

The following options can be set:

Parameter	Description	Values
Factor, step	Defines the factor and the step.	Factor I Step
Secondary information	Activates or deactivates the secondary information displayed on screen. **Additional unit*** Selects the secondary information displayed on screen. The available units are model- and country-specific. **Current tare** Current tare weight.	ON* I OFF
Target and tolerances	Defines the target weight and tolerances. **Target weight** Predefines a target weight. The value can be selected manually or by weighing. **Upper tolerance** Defines the upper tolerance. **Lower tolerance** Defines the lower tolerance. If the value for **Target weight**, **Upper tolerance** or **Lower tolerance** has been defined, the option title **Target and tolerances** will be replaced by the defined values.	ON I OFF* Numerical value (depending on the balance type)

* Factory setting

Defining factor and step

1 Tap .
   ➡ The screen **Factor weighing – Main configuration** appears.
2 Tap **Factor, step**.
   ➡ The dialog screen **Factor – Multiplication** appears.
3 Tap × to delete the value.
4 Define **Factor**.
5 Tap to change the operation from **Multiplication** to **Division** or vice versa.
6 Tap ✓.
7 Tap .
   ➡ The dialog screen **Step** appears.
8 Define **Step**.
9 Tap ✓ to confirm.
   ➡ The screen **Factor weighing – Main configuration** appears.
10 Tap ✓ to return to the application screen.

7.2 Activities - Adjustments and tests

Navigation: ▦ > ⚖

Activities - Adjustments and tests consists of the following elements:

- **FACT**, see [Fully automatic adjustment (FACT) ▸ Page 84]
- **Internal Adjustment**, see [Internal adjustment ▸ Page 84]
- **External Adjustment**, see [External adjustment ▸ Page 85]
- **Fine adjustment**, see [Fine adjustment (model-dependent) ▸ Page 85]
- **Adjust touch**, see [Touch screen adjustment ▸ Page 86]
- **Adjust level**, see [Level center adjustment ▸ Page 86]
- **Routine test**, see [Routine test ▸ Page 86]
- **Repeatability test**, see [Repeatability test ▸ Page 87]

7.2.1 Fully automatic adjustment (FACT)

Navigation: ▦ Activities > ⚖ Activities - Adjustments and tests > FACT FACT

FACT is activated as a default value. If the **FACT** function is not activated, all functionalities, such as temperature and time, are inactive.

FACT means that the balance adjusts itself based on the following criteria:

- if the conditions change (temperature difference min. 2 °C), which may lead to a noticeable deviation in the measurement.
- on a predefined date and time programmed by the user.

Defining FACT

The date and time of FACT can be defined as follows:

1 Tap **FACT**.

2 Activate **Fully automatic adjustment (FACT)**.

➡ The dialog screen **Fully automatic adjustment (FACT)** appears.

3 Select the time (hours : minutes) using the pick buttons.

4 Tap ✓ to confirm.

➡ The time underneath **FACT** has been updated and displays the time of the daily adjustment.

5 Tap ← to return to the application screen.

When setting the time, hold the pick button to scroll faster.

If a predefined criterion is due, the flashing FACT status icon appears in the display. The balance indicates that it wishes to perform a FACT adjustment.

1 Unload the balance.

2 Do not select any key.

➡ Adjustment starts automatically.

➡ The status icon extinguishes after successful adjustment.

7.2.2 Internal adjustment

Navigation: ▦ Activities > ⚖ Activities - Adjustments and tests > Adjust internal

If the balance is configured and connected to a printer, the results of the adjustment process will be printed.

Perform an internal adjustment manually

1 Unload the balance.

2 Tap **Adjust internal**.

3 Tap ▶.

➡ The internal adjustment procedure will start. The screen displays **Adjustment ongoing…**.

➡ When the internal adjustment procedure is successfully completed, the results of the internal adjustment will appear.

4 Tap ✓ to confirm.

➡ The screen **Activities - Adjustments and tests** appears.

5 Tap ← to return to the application screen.

7.2.3 External adjustment

Navigation: ⊞ Activities > Activities - Adjustments and tests > Adjust external

Legal-for-trade

Because of certification legislation, approved balances cannot be adjusted with an external weight (depending on the certification legislation of the selected country).

1 Tap **Adjust external**.

➡ The dialog screen **Adjustment weight** appears.

2 Tap to define the adjustment weight according to the weight certificate.

3 Tap × to delete the value.

4 Enter the new value and confirm with ✓.

5 Prepare the adjustment weight and tap ▶ to start the adjustment process.

6 Load the adjustment weight in the center of the weighing pan.

7 Unload the adjustment weight from the weighing pan.

➡ When the external adjustment procedure is successfully completed, the result will appear.

8 Tap ✓ to confirm.

➡ The screen **Activities - Adjustments and tests** appears.

9 Tap ← to return to the application screen.

7.2.4 Fine adjustment (model-dependent)

Navigation: ⊞ > Activities - Adjustments and tests > Adjust fine

The value of the internal adjustment weight can be individually adjusted in a very small range via the **Fine adjustment** function.

- Use only certificated weights.
- Make sure that the environmental conditions are correct.
- The balance must be leveled.
- Balance and test weights must observe the operating temperature.
- For fine adjustments, we recommend contacting a balance expert or a METTLER TOLEDO representative.

Legal-for-trade

Approved models are not able to be adjusted with this function.

Performing fine adjustment

■ Adjusting weight is prepared.

1 Tap **Adjust fine**.

➡ The dialog screen **Reference weight** appears.

2 Tap × to delete the value.

3 Enter the weight value according to the certificate.

4 Tap ✓ to confirm.

5 Tap ▶ to start the process.

6 Place the adjustment weight in the center of the weighing pan.

7 Remove the adjustment weight.

➡ The result will appear once the fine adjustment procedure is successfully completed.

8 Tap ✓ to confirm.

➡ The screen **Activities - Adjustments and tests** appears.

9 Tap ← to return to the application screen.

Tap ↺ to reset the defined reference weight back to the default value.

7.2.5 Touch screen adjustment

Navigation: Activities > Activities - Adjustments and tests > Adjust touch

If the balance does not respond correctly when a certain area of the display is tapped, the touch screen can be adjusted with **Adjust touch**.

1 Tap **Adjust touch**.

➡ Touch screen ongoing. Please wait until the screen **Done** appears.

2 Tap ✓ to confirm.

➡ The screen **Activities - Adjustments and tests** appears.

3 Tap ← to return to the application screen.

7.2.6 Level center adjustment

Navigation: Activities > Activities - Adjustments and tests > Adjust level

The adjustment sets the exact center position of the level indicator and corrects any possible shifts.

Note

Run the level indicator center adjustment only when the electronic in/out level notification (status icon) and visual bubble position do not match.

1 Tap **Adjust level**.

➡ The screen **Level center adjustment** appears.

2 Tap ✓ to confirm.

➡ The screen **Level center adjustment** appears.

3 Follow the instructions and confirm with ✓.

➡ The screen **Done Level center adjustment** appears.

4 Tap ✓ to confirm.

5 Tap ← to return to the application screen.

7.2.7 Routine test

Navigation: Activities > Activities - Adjustments and tests > Routine test

The **Routine test** function allows the sensitivity of the balance to be set for periodic tests.

The set values appear at the top of the screen in the weighing information bar. The bar works as a shortcut.

Routine test – Main configuration

The following options can be set:

Parameter	Description	Values
Test weight in g	Defines the test weight.	Numerical value (depending on the balance type)
± Control limit in g	Defines the control limit.	Numerical value (depending on the balance model)
± Warning limit in g	Activates or deactivates the warning limit.	ON* numerical value (depending on the balance model) I OFF

Use tare container	Activates or deactivates the use of a tare vessel.	ON I OFF*

* Factory setting

Setting the test weight, control limits and warning limits

1 Tap .
   ➡ The screen **Routine test – Main configuration** appears.
2 Tap **Test Weight**.
   ➡ The dialog screen **Test weight in g** appears.
3 Tap × to delete the value.
4 Enter the new value.
5 Tap ⊗.
   ➡ The dialog screen **± Control limit in g** appears.
6 Tap × to delete the value.
7 Enter the new value.
8 Tap ❗.
   ➡ The dialog screen **± Warning limit in g** appears.
9 Tap × to delete the value.
10 Enter the new value and confirm with ✓.
11 Activate or deactivate the option **Use tare container** if required.
12 Tap ✓ to confirm.
13 Tap ← to return to the application screen.

Performing a routine test

- The routine test options **Test weight in g**, **± Control limit in g** and **± Warning limit in g** are defined.
- The test weight is prepared.

1 Tap ▶ to start the process.
2 Place the test weight in the center of the weighing pan.
   ➡ During the test, the screen shows **Waiting for stable weight...**.
   ➡ When the test is finished, the screen shows **Please unload weight**.
3 Remove the test weight from the weighing pan.
   ➡ When the routine test is successfully completed, the result appears.
4 Tap ✓ to confirm.
5 Tap ← to return to the application screen.

7.2.8 Repeatability test

Navigation: Activities > Activities - Adjustments and tests > Repeatability test

A specific number of internal weight tests can be defined via the **Repeatability test** function.

The set number of tests appears at the top of the screen in the weighing information bar. The bar works as a shortcut.

Setting the number of repetitions

1 Tap .
   ➡ The dialog screen **Repeatability test - Repetitions** appears.
2 Tap × to delete the value.
3 Enter the number of repetitions. The number must be between 5 and 100.
4 Tap ✓ to confirm the number of repetitions.
5 Tap ▶ to start the process.

➡ The balance executes the defined number of tests. The message **Test ongoing, please wait...** appears on the display during the process. The process can be aborted by tapping ×.

➡ After the test is finished, an overview with the test results appears on the screen.

6 Tap ✓ to confirm.

7 Tap ← to return to the application screen.

8 Communication with Peripheral Devices

This section lists some typical examples of where the balance can communicate with peripheral devices and networks. In most cases, it is possible to do so via USB or RS232C. The chapters are primarily restricted to a USB setup.

8.1 USB - interface and installation

Before connecting the balance via the USB device interface to a PC and using either the **HOST** or **PC-Direct** function, the appropriate METTLER TOLEDO USB driver has to be assigned to the PC first. The USB driver can be found on www.mt.com/labweighing-software-download. If you have any questions, please contact a METTLER TOLEDO representative.

Note

If you connect the balance via USB to the PC before installing the METTLER TOLEDO USB driver, Windows will automatically install the wrong driver.

Requirements

- Balance with USB device interface
- PC with one of the following Microsoft Windows® 32-bit/64-bit operating systems: Win 7 (SP1), Win 8 or Win 10
- Administrator rights for installing software
- USB connection cable to link PC to balance

Download USB driver

1 Connect to the internet.
2 Go to the site www.mt.com/labweighing-software-download.
3 Click **Download Driver** in section **USB Driver for Advanced and Standard level laboratory balances**.
   ➡ A pop-up window with interactions appears.
4 Click, e.g., **Open**.
   ➡ The extract screen appears.
5 Extract the file **MT_Generic_USB_Serial_Port_Driver_SW_en_vx.xx.x.x.zip** to your specified location.
6 Right-click on the downloaded installation program **MT_Generic_USB_Serial_Port_Driver_SW_en_vx.xx.x.x.exe** and select **Run as Administrator**.
7 If a safety warning appears, confirm windows to perform the installation.
8 Click **Next** and follow the installer's instructions.

Installing the balance

1 Switch the balance **off**.
2 Connect the balance to the preferred USB port on the PC.
3 Switch the balance **on**.

8.2 Send weight value via USB or RS232C to a PC using PC-Direct

The numerical value displayed at the balance can be transferred to the cursor position in windows applications, e.g., Excel, Word in the same way as typing with the keyboard.

The data is transferred via USB or via the serial RS232C interface.

The weight value without the unit will be transferred.

Requirements

- PC with one of the following Microsoft Windows® 32-bit/64-bit operating systems: Win 7 (SP1), Win 8 or Win 10
- Serial interface RS232C or USB
- Administrator rights for installing the SerialPortToKeyboard software (if data transfer is via RS232C)
- Windows application, e.g., Excel
- Connection between balance and PC via cable RS232C or USB

8.2.1 PC-Direct via USB

The balance can send data (as a keyboard) to the PC used for PC applications, e.g., Excel. The balance sends the weight value without the unit to the PC.

Use the USB connection cable to connect the balance with the PC. Connect the USB cable to the USB device (type B) on the balance.

■ The balance must be disconnected from the PC.

1 Tap ⚙.

2 Tap **General configuration**.

3 Tap **Devices**.

4 The screen **Devices** appears.

5 Tap +.

➡ The screen **Device/service type** appears.

6 Select **PC-Direct** and confirm with ✓.

➡ The screen **Connection type** appears.

7 Tap **USB Device** and confirm with ✓.

➡ The screen **PC-Direct** – **Document on PC** appears.

8 If necessary, change the other settings, e.g., **End of line** and confirm with ✓.

9 Tap ✓ to confirm.

10 The screen **Devices** appears.

11 Tap ← to return to the previous screen.

12 Tap **Publishing**.

➡ The screen **Publishing** appears.

13 Tap **Send data**.

➡ The screen **Send data** appears.

14 Select the transmission mode for single values and result values, e.g., **Manual, stable** and confirm with ✓.

15 Tap ← to return to the previous screen.

16 **Connect the balance to the PC.**

17 Place the sample on the weighing pan.

18 Press 🖶, the next stable weight will be sent to the cursor position of your application.

8.2.2 PC-Direct via RS232C

8.2.2.1 Installing SerialPortToKeyboard software

The operation of PC-Direct via serial port RS232C requires the installation of **SerialPortToKeyboard** on your host computer. The file **SerialPortToKeyboard** can be found on www.mt.com/labweighing-software-download. If you have any questions, please contact a METTLER TOLEDO representative.

Download SerialPortToKeyboard

1 Connect to the internet.
2 Go to the site www.mt.com/labweighing-software-download.
3 Click **Download Software and Instructions** in section **SerialPortToKeyboard software for Advanced and Standard level laboratory balances**.
   ➡ A pop-up window with interactions appears.
4 Click, e.g., **Open**.
   ➡ The extract screen appears.
5 Extract the file **SerialPortToKeyboard_V_x.xx_installer_and_instructions.zip** to your specified location.
6 Right-click on the downloaded installation program **SerialPortToKeyboard_V_x.xx.exe** and select **Run as Administrator**.
7 If a safety warning appears, confirm windows to perform the installation.
8 Click **Next** and follow the installer's instructions.

Checking operation

1 Start **SerialPortToKeyboard** (RS232C)
2 Start Excel (or another application) at the PC.
3 Activate a cell in Excel.

Settings at the PC

Settings for SerialPortToKeyboard

1 Select the serial port **COM** for the connection with the balance.
2 Set the **Baud Rate** to **9600**.
3 Activate **Connect**.

- Closing the window terminates the session.

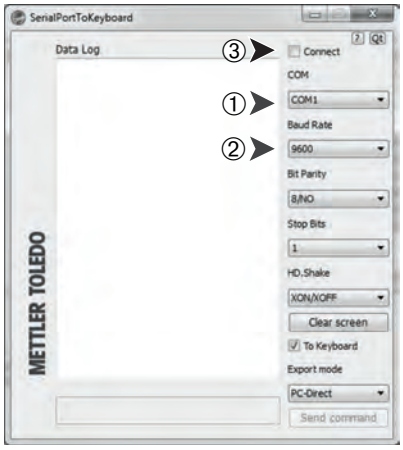

According to your selected **End of line** option, the displayed values will appear, e.g., in the column one after the other one in the different rows.

8.2.2.2 Settings on the balance

- The balance is connected to the PC via an RS232 cable.

1 Tap ⚙.
2 Tap **General configuration**.
3 Tap **Devices**.
4 The screen **Devices** appears.

5 Tap [+].

➡ The screen **Device/service type** appears.

6 Select **PC-Direct** and confirm with ✓.

➡ The screen **Connection type** appears.

7 Tap **RS232** and confirm with ✓.

➡ The screen **PC-Direct** – **Document on PC** appears.

8 If necessary, change the other settings, e.g., **End of line** and confirm with ✓.

9 Tap ✓ to confirm.

10 Tap ← to return to the previous screen.

11 Tap **Publishing**.

➡ The screen **Publishing** appears.

12 Tap **PC-Direct (RS232)**.

➡ The screen **Send data** appears.

13 Select the transmission mode for single values and result values, e.g., **Automatic, stable** and confirm with ✓.

14 Tap ✓ to confirm.

➡ The screen **Publishing** appears.

15 Tap ← to return to the previous screen.

16 Place the sample on the weighing pan.

➡ The next stable weight will be sent automatically to the cursor position of your application.

8.3 Collecting measurement results and balance details with EasyDirect Balance

EasyDirect Balance from METTLER TOLEDO is a PC software to collect, analyze, store and export measurement results and balance details from up to 10 balances. EasyDirect Balance supports all Advanced and Standard Level Laboratory Balances and many legacy models from METTLER TOLEDO. For more information and to download a trial version of the software, please refer to www.mt.com/EasyDirectBalance.

The balance can be connected either via LAN or RS232, but the full functionality is only available with a LAN connection. When using an RS232 connection, only a limited set of data can be collected by EasyDirect Balance. Please refer to the table "Data available to EasyDirect Balance, depending on the data interface" for more details.

Configure the balance

- The balance is connected with an Ethernet cable to the LAN.
- LAN is activated on the balance. For more information, please refer to "**Network and Bluetooth**".

1 Tap ⚙.
2 Tap **General configuration**.
3 Tap **Devices**.
4 The screen **Devices** appears.
5 Tap +.
   ➡ The screen **Device/service type** appears.
6 Select **EasyDirect Balance** and confirm with ✓.
   ➡ The screen **Connection type** appears.
7 Tap **Network: LAN** and confirm with ✓.
   ➡ The screen **Port** appears.
8 If necessary, change the port number and confirm with ✓.
   ➡ The screen **EasyDirect Balance – Software on PC** appears.
9 Tap ✓ to confirm.
10 Tap ← to return to the **General configuration** screen.
11 Tap **Publishing**.
   ➡ The screen **Publishing** appears.
12 Tap **Send data**.
   ➡ The screen **Send data** appears.
13 Select the transmission mode, e.g., **Automatic, stable** and confirm with ✓.
14 Tap ✓ to confirm.
15 Tap ← to return to the previous screen.

Please be aware that the report configuration does not apply to EasyDirect Balance; all available data is sent according the details on the table "Data available to EasyDirect Balance, depending on the data interface".

Transfer data

1 Install EasyDirect Balance on your PC.
2 Follow the instructions to add the balance in EasyDirect Balance.
3 Publish the data from the balance either manually or automatically.

Note

- To connect the balance manually via LAN, you need to know the IP address and port number of your balance, which can be displayed when selecting the EasyDirect Balance under "Services" in the **Devices** menu.
- The PC with EasyDirect Balance and the balances must be connected to the same LAN, e.g., **168.125.x.xxx**.
- When connecting the balance via LAN, certain information is also sent to EasyDirect Balance, independently of any publishing activity.

Data available to EasyDirect Balance, depending on the data interface

		LAN	RS232
Balance details	Balance model	✓	✓
	Balance ID	✓	✓
	Balance serial number	✓	✓
	Balance capacity	✓	✓
	Balance readability	✓	–
	Level status	✓	–
	Adjustment status	✓	–
	Service status	✓	–
	Connection status	✓	–
Measurement results	Gross/Tare/Net weight	✓	✓
	Unit 1 and Unit 2 (incl. pcs, %)	✓	✓
	Stability condition	✓	✓
	Date and Time	✓	✓
	Sample and task IDs	✓	✓
	Target and tolerances	✓	–
	User name	✓	–
	Application specific results and parameters	✓	–
Supported activities	Weighing	✓	✓
	Counting	✓	✓
	Percent weighing	✓	✓
	Factor weighing	✓	✓
	Check weighing	✓	–
	Dynamic weighing	✓	–
	Formulation	✓	–
	Totaling	✓	–
	Back-weighing	✓	–
	Density	✓	–
	Adjustments	✓	–
	Routine test	✓	–
	Repeatability test	✓	–

8.4 Connect via USB to a printer and print weighing results

Prerequisite

- The printer is connected to the power supply.
- Printer is switched on.
- The printer is connected to the balance via USB cable. Do not connect the printer with the balance, before it is correctly powered on.

The following example shows the option to automatically print the next stable value.

1 Tap ⚙.

2 Tap **General configuration**.

3 Tap **Devices**.

4 The screen **Devices** appears.

5 The connected USB device appears automatically.

6 Tap the connected printer, e.g., **P-56/58** and confirm with ✓.

➡ The screen **P-56/58** – **Excellence lab printer** appears.

7 Tap ✓✗ TEST for the printer test.

➡ Test page printed. Check the printout.

8 Tap ✓ to confirm.

9 Tap ← to return to the previous screen.

➡ The screen **Device/service type** appears.

10 Tap ← to return to the **General configuration** screen.

11 Tap **Publishing**.

➡ The screen **Publishing** appears.

12 Tap **Print and export report**.

➡ The screen **Print and export – General configuration** appears.

13 Tap **Single values reports**.

➡ The screen **Single values reports** appears.

14 Select the transmission mode, e.g., **Automatic, stable** and confirm with ✓.

15 Tap ✓ to confirm.

16 Tap ← to return to the previous screen.

17 Place the sample on the weighing pan.

➡ The next stable weight will be sent automatically.

8.5 Connect via LAN to a P-50 printer and print weighing results

The following example shows the option to automatically print the next stable value.

- Balance and P-50 printer are connected via Ethernet cables to the same LAN.

1 Tap ⚙.
2 Tap **General configuration**.
3 Tap **Network and Bluetooth**.
   ➡ The screen **Network and Bluetooth** appears.
4 Tap **LAN**.
   ➡ The screen **LAN** appears.
5 Tap **ON** to activate **LAN** and confirm with ✓.
   ➡ LAN connection is established.
6 Tap ← to return to the **General configuration** screen.
7 Tap **Devices**.
8 The screen **Devices** appears.
9 Tap +.
   ➡ The screen **Device/service type** appears.
10 Select the device to be configured as **P-56/58** by tapping.
11 Tap ✓ to confirm.
   ➡ The screen **Connection type** appears.
12 Tap **Network: LAN** and confirm with ✓.
   ➡ The screen **IP address** appears.
13 Enter the IP address of the printer and confirm with ✓.
   ➡ The screen **Port** appears.
14 If necessary, change the port number and confirm with ✓.
   ➡ The screen **P-56/58** – **Excellence lab printer** appears.
15 Tap ✓✗ TEST for the printer test.
   ➡ Test page printed. Check the printout.
16 Tap ✓ to confirm.
17 Tap ← to return to the **General configuration** screen.
18 Tap **Publishing**.
   ➡ The screen **Publishing** appears.
19 Tap **Print and export report**.
   ➡ The screen **Print and export – General configuration** appears.
20 Tap **Single values reports**.
   ➡ The screen **Single values reports** appears.
21 Select the transmission mode, e.g., **Automatic, stable** and confirm with ✓.
22 Tap ✓ to confirm.
23 Tap ← to return to the previous screen.
24 Place the sample on the weighing pan.
   ➡ The next stable weight will be sent automatically.

8.6 Connect via Bluetooth to a P-50 printer and print weighing results

The following example shows the option to automatically print the next stable value.

- The wireless dongle MTICWD-100 is connected to the balance and the Bluetooth to RS32 adapter is connected to the printer.
- Bluetooth is activated on the balance. For more information, please refer to "**Network and Bluetooth**".
- Printer is switched on.

1 Tap ⚙.
2 Tap **General configuration**.
3 Tap **Devices**.
4 The screen **Devices** appears.
5 Tap +.
   ➡ The screen **Device/service type** appears.
6 Tap the printer you would like to connect to, e.g., **P-56/58** and confirm with ✓.
   ➡ The screen **Connection type** appears.
7 Tap **Bluetooth** and confirm with ✓.
   ➡ The screen **Bluetooth device** appears.
8 Select the device to be configured as **P-56/58** by tapping.
9 Tap ✓ to confirm.
   ➡ The screen **Password** appears.
10 Tap ✓ to confirm.
   ➡ The screen **P-56/58** – **Excellence lab printer** appears.
11 Tap ✓ to confirm.
12 The screen **Devices** appears.
13 Tap ← to return to the **General configuration** screen.
14 Tap **Publishing**.
   ➡ The screen **Publishing** appears.
15 Tap **Print and export report**.
   ➡ The screen **Print and export – General configuration** appears.
16 Tap **Single values reports**.
   ➡ The screen **Single values reports** appears.
17 Select the transmission mode, e.g., **Automatic, stable** and confirm with ✓.
18 Tap ✓ to confirm.
19 Tap ← to return to the previous screen.
20 Place the sample on the weighing pan.
   ➡ The next stable weight will be sent automatically.

8.7 Connect a USB barcode reader and scan the barcode

The following example shows how to scan the sample ID via a barcode reader.

Use the USB connection cable to connect the barcode reader to a balance.

Only the balance settings are changed for this menu item.

Refer to your barcode reader's documentation for information about the barcode reader settings.

The barcode reader must be configured as USB keyboard (with standard key encoding).

Settings on the balance

- USB barcode reader is connected to the balance.

1 Tap in the status information field on the balance screen.
   ➡ The screen **Notifications** appears.
2 Tap **Input device connected**.
   ➡ The screen **Input device connected** appears.
3 Tap **Barcode reader** and confirm with ✓.
4 Tap ← to return to the previous screen.
5 Tap .
6 Tap **General configuration**.
7 Tap **Devices**.
8 The screen **Devices** appears.
9 Tap **Barcode reader**.
   ➡ The screen **Barcode reader** – **External input device** appears.
10 Check the **End of line** setting. The setting must be the same as the barcode reader.
11 Tap ✓ to confirm.
12 Tap ← to return to the previous screen.

Typical setup to use the barcode reader

1 Tap .
2 Select an application, e.g., **Weighing**
3 Tap .
   ➡ The screen **Weighing – Main configuration** appears.
4 Tap .
   ➡ The screen **Weighing - reports configuration** appears.
5 Tap **Identifications**.
   ➡ The screen **Identifications** appears.
6 Tap **ID 4**.
7 Activate **ID 4**.
8 Select **Input prompt** and confirm with ✓.
9 Tap ✓ to return to the previous screen.
10 Place the sample on the weighing pan.
11 Tap .
   ➡ The screen **Sample ID** appears.
12 Scan the sample ID with the barcode reader.
   ➡ The sample ID is entered on the **Sample ID** screen and the screen is then closed.

8.8 Connect a USB keyboard

Use a USB keyboard with US, German and French layout (QWERTY, QWERTZ, AZERTY). An external keyboard can be used to enter the IDs. IDs can consist of numeric, alphanumeric and special characters.

- USB keyboard is connected to the balance.

1 Tap in the status information field on the balance screen.
   ➡ The screen **Notifications** appears.
2 Tap **Input device connected**.
   ➡ The screen **Input device connected** appears.
3 Tap **Keyboard** and confirm with ✓.
4 Tap ← to return to the previous screen.
5 Tap .
6 Tap **General configuration**.
7 Tap **Devices**.
8 The screen **Devices** appears.
9 Tap **Keyboard**.
   ➡ The screen **Keyboard** – **External input device** appears.
10 Tap **Keyboard**.
   ➡ The screen **Keyboard language** appears.
11 Select your language by tapping and confirm with ✓.
12 Tap ✓ to confirm.
13 Tap ← to return to the previous screen.

➡ The IDs can be entered via the external keyboard.

8.9 Export measurement results to a USB memory stick

Connect a USB memory stick (FAT32 formatted, high quality, if possible empty) to the USB host interface.

The USB memory stick appears automatically as a new device in the Menu > **General configuration** > **Devices**.

1 Tap ⚙.
2 Tap **General configuration**.
3 Tap **Devices**.
4 The screen **Devices** appears.
5 Tap **Publishing**.
   ➡ The screen **Publishing** appears.
6 Tap **Print and export report**.
   ➡ The screen **Print and export – General configuration** appears.
7 Tap **Single values reports**.
   ➡ The screen **Single values reports** appears.
8 Select the transmission mode, e.g., **Automatic, stable** and confirm with ✓.
9 Tap ✓ to confirm.
10 Tap 💾.
   ➡ The screen **Export report file** appears.
11 Tap **File type**
   ➡ The screen **File type** appears.
12 Select, e.g., **csv** and confirm with ✓.
13 Tap **File name**.
   ➡ The screen **File name** appears.
14 If necessary, change the default name and confirm with ✓.
   ➡ The screen **Date/Time of file creation** appears.
15 Select the **Date/Time of file creation** at the end or beginning of the report and confirm with ✓.
16 Tap **File location**.
   ➡ The screen **File location** appears.
17 Enter a name for the path of the storage folder and confirm with ✓.
18 Tap ✓ to confirm.
   ➡ The screen **Publishing** appears.
19 Tap ✓ to confirm.
20 Tap ← to return to the application screen.

View exported data

1 Connect memory stick to PC.
2 Open the METTLER TOLEDO folder and then the "Reports folder".
3 Open the PDF with your relevant measurement results.

8.10 Export XML files to a FTP server and import them with the help of a XSD file

Exporting comprehensive weighing data on a regular basis to an Excel spreadsheet can be done in a very convenient way by exporting/importing the data as an XML file in combination with the use of a XSD file. The XSD file contains the data structure of an XML document, which allows easy integration of weighing results into an Excel sheet. It maps the elements and attributes from the XML file to your Excel spreadsheet/template.

- The balance is connected with an Ethernet cable to the LAN.

1 Tap ⚙.
2 Tap **General configuration**.
3 Tap **Network and Bluetooth**.
   ➡ The screen **Network and Bluetooth** appears.
4 Tap **LAN**.
   ➡ The screen **LAN** appears.
5 Tap **ON** to activate **LAN** and confirm with ✓.
   ➡ LAN connection is established.
6 Tap ← to return to the **General configuration** screen.
7 Tap **Devices**.
8 The screen **Devices** appears.
9 Tap +.
   ➡ The screen **Device/service type** appears.
10 Tap **File server (FTP)** and confirm with ✓.
   ➡ The screen **Connection type** appears.
11 Tap **Network: LAN** and confirm with ✓.
   ➡ The screen **IP address** appears.
12 Enter the IP address of the FTP server and confirm with ✓.
   ➡ The screen **Port** appears.
13 If necessary, change the port number and confirm with ✓.
   ➡ The screen **Credentials** appears.
14 If necessary tap **Credentials** and activate the option by tapping **ON**.
15 Enter a user name and password and confirm with ✓.
   ➡ The screen **File server (FTP)** – **Remote storage** appears.
16 Tap ✓ to confirm.
17 Tap ← to return to the previous screen.
18 Tap **Publishing**.
   ➡ The screen **Publishing** appears.
19 Tap **Print and export report**.
   ➡ The screen **Print and export – General configuration** appears.
20 Tap 💾.
   ➡ The screen **Export report file** appears.
21 Tap **File type**
   ➡ The screen **File type: xml** appears.
22 Tap ← to return to the previous screen.
23 If necessary, change the other settings and confirm with ✓.
24 Tap ← to return to the previous screen.

Make sure that in the application used, the report content is correctly configured.

1 Tap ⊞.
   ➡ The screen **Activities - Weighing applications** appears.

2 Select, e.g., % **Percent weighing**.

3 Tap %⚙ symbol in the upper left corner to define the application.

➡ The screen **Percent weighing – Main configuration** appears.

4 Tap .

➡ The screen **Percent weighing** – **Reports configuration** appears.

5 Configure the report and conform all you settings with ✓.

- Download the relevant XSD file for Advanced level balances from www.mt.com/labweighing-software-download.
- Import the XSD file into MS Excel via the developer tab.
- Drag and drop the relevant elements and attributes to your Excel spreadsheet.
- Import the XML weighing report you published on the balance from the FTP server.
- The Excel spread sheet gets populated with the required data at the pre-defined place.

For more information on how to use XSD and XML files with MS Excel, please consult the internet.

8.11 Communication with MT-SICS commands via LAN

To enable you to integrate balances in your IT or data management system in a simple manner most balance functions are also available as appropriate commands (MT-SICS) via the data interfaces. The complete set of available commands are available in the "Reference Manual for MT-SICS commands", which can be found in the expertise library www.mt.com/library.

To communicate with MT-SICS commands with the balance over, e.g., LAN the following configuration is required on the balance.

- The balance is connected with an Ethernet cable to the LAN.

1 Tap ⚙.
2 Tap **General configuration**.
3 Tap **Network and Bluetooth**.
   ➡ The screen **Network and Bluetooth** appears.
4 Tap **LAN**.
   ➡ The screen **LAN** appears.
5 Tap **ON** to activate **LAN** and confirm with ✓.
   ➡ LAN connection is established.
6 Tap ← to return to the **General configuration** screen.
7 Tap **Devices**.
8 The screen **Devices** appears.
9 Tap +.
   ➡ The screen **Device/service type** appears.
10 Select **Command host** and confirm with ✓.
   ➡ The screen **Connection type** appears.
11 Tap **Network: LAN** and confirm with ✓.
   ➡ The screen **Port** appears.
12 If necessary, change the port number and confirm with ✓.
   ➡ The screen **Command host** – **Hosting system** appears.
13 Configure the **Command set**, **Character set** and **End of line** according your requirements and confirm with ✓.
14 Tap ✓ to confirm.
15 Tap ← to return to the **General configuration** screen.
16 Tap **Publishing**.
   ➡ The screen **Publishing** appears.
17 Tap **Send data**.
   ➡ The screen **Send data** appears.
18 Select the transmission mode to use when no MT-SICS command is sent from the system and confirm with ✓.
19 Tap ✓ to confirm.
20 Tap ← to return to the previous screen.

➡ The balance is ready to respond on MT-SICS commands via the LAN interface.

9 Maintenance

To guarantee the functionality of the balance and the accuracy of the weighing results, a number of maintenance actions must be performed by the user.

9.1 Maintenance tasks

Maintenance action	Recommended interval	Remarks
Performing an internal adjustment	• Daily • After cleaning • After leveling • After changing the location	see "Activities - Adjustments and tests"
Performing routine tests (eccentricity test, repeatability test, sensitivity test). METTLER TOLEDO recommends to at least perform a sensitivity test.	• After cleaning • After assembling the balance • Depending on your internal regulations (SOP)	see "Activities - Adjustments and tests"
Cleaning	• After every use • After changing the substance • Depending on the degree of pollution • Depending on your internal regulations (SOP)	see "Cleaning"

9.2 Cleaning

9.2.1 Cleaning the glass draft shield (0.1 mg and 1 mg models)

⚠ CAUTION

Injury due to sharp objects or broken glass

Instrument components, e.g., glass, can break and lead to injuries.

– Always proceed with focus and care.

1 Turn the two lock covers (1) on the front.
2 Push the side glass doors back.

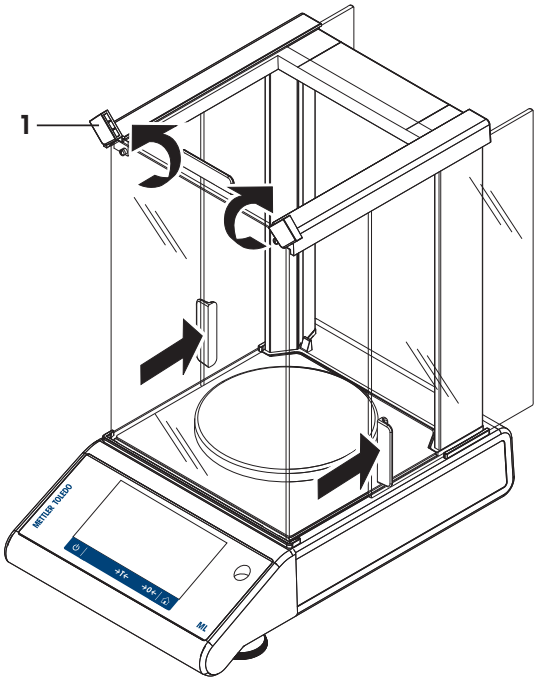

3 Tilt the front glass.
4 Remove the front glass.

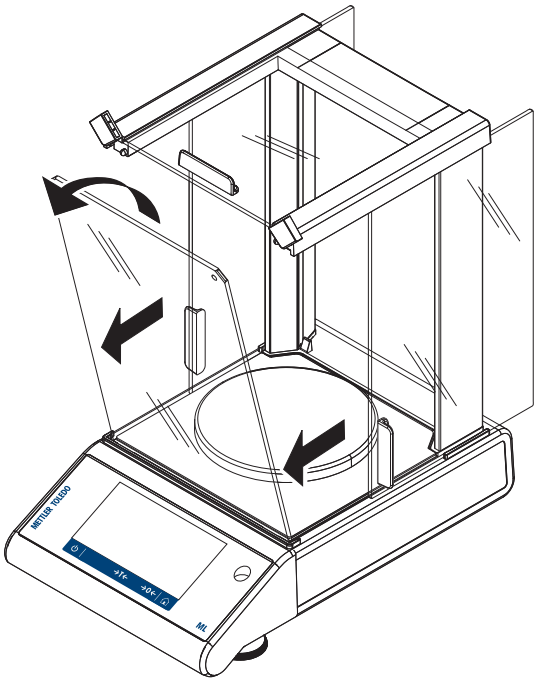

5 Pull the top glass door out.

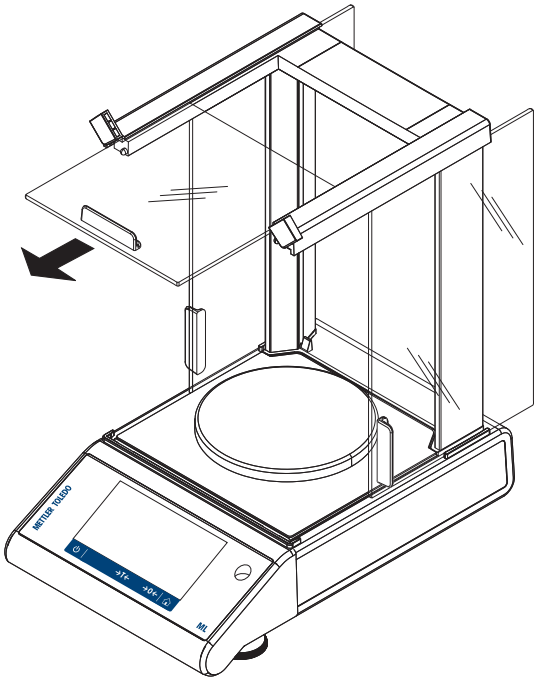

6 Lift the side glass doors and pull them out.

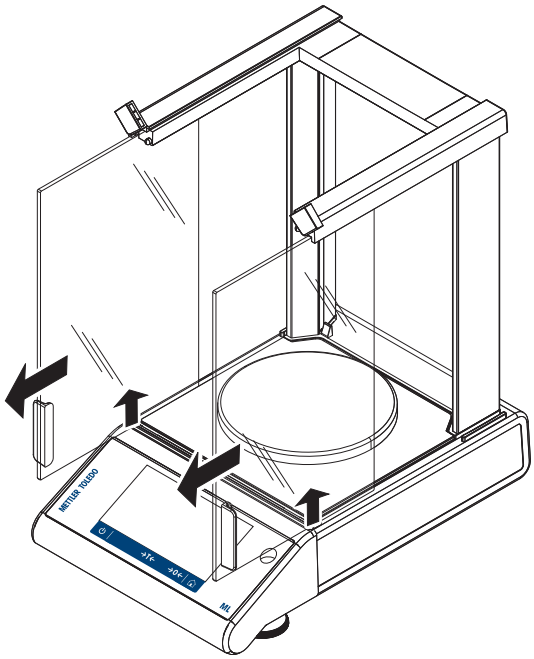

7 Push the lock button to release the rear glass.

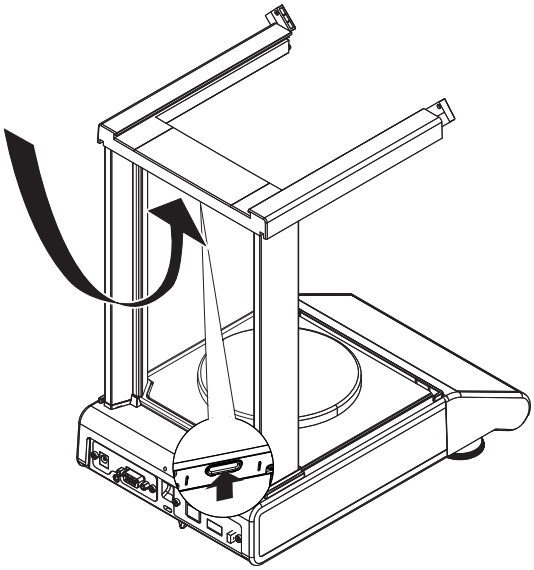

8 Remove the rear glass.

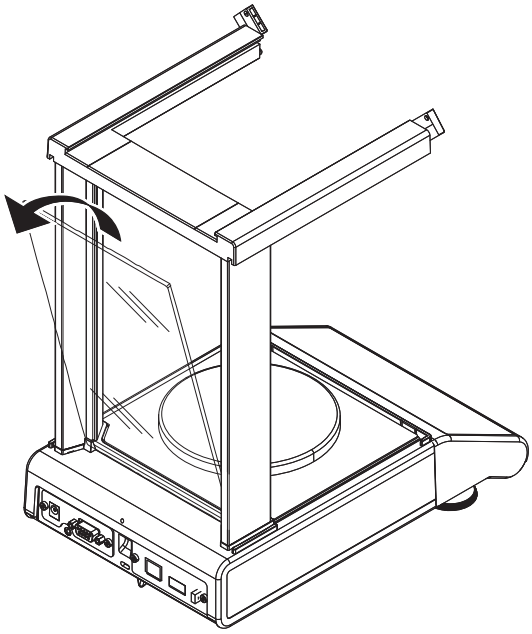

9 Remove weighing pan, pan support and bottom plate.

After cleaning, reinstall all components in the reverse order. For balance mounting, refer to "Assembling the balance".

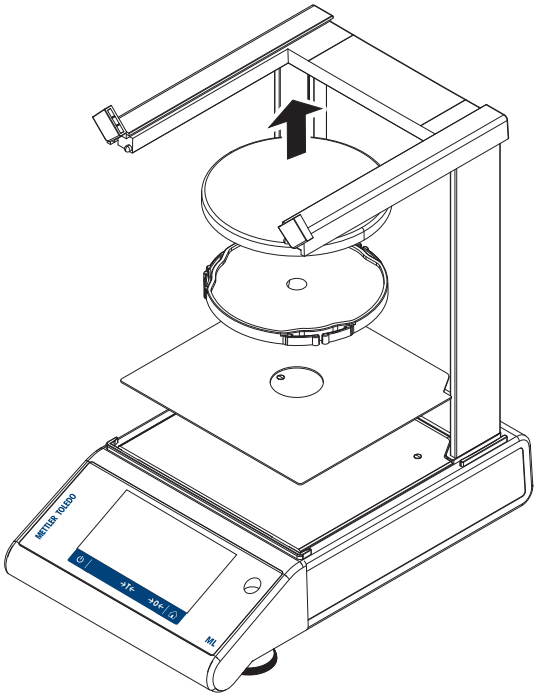

9.2.2 Cleaning the balance

⚠ WARNING

Death or serious injury due to electric shock

Contact with parts carrying a live current can lead to injury and death.

1 Disconnect the instrument from the power supply prior to cleaning and maintenance.

2 Prevent liquid from entering the instrument, terminal or AC/DC adapter.

NOTICE

Damage due to improper cleaning

Improper cleaning can damage the load cell or other essential parts.

1 Do not use any cleaning agents other than the ones specified in the "Reference Manual" or "Cleaning Guide".

2 Do not spray or pour liquids on the instrument. Always use a moistened lint-free cloth or a tissue.

3 Always wipe out from inside to outside of the instrument.

Cleaning around the balance

– Remove any dirt or dust around the balance and avoid further contaminations.

Cleaning the removable parts

– Clean the removed part with a damp cloth or a tissue and a mild cleaning agent.

Cleaning the balance

1 Disconnect the balance from the AC/DC adapter.

2 Use a lint-free cloth moistened with a mild cleaning agent to clean the surface of the balance.

3 Remove powder or dust at first with a disposable tissue.

4 Remove sticky substances with a damp lint-free cloth and a mild solvent.

Note

Useful details to avoid soiling the instrument are described in the Mettler-Toledo GmbH "SOP for Cleaning a Balance".

9.2.3 Putting into operation after cleaning

1 Reassemble the balance.
2 Check the functionality of the draft shield if applicable.
3 Press ⏻ to switch on the balance.
4 Warm up the balance. Wait 1h for the acclimatization, before starting the tests.
5 Check the level status, level the balance if necessary.
6 Perform an internal adjustment.
7 Perform a routine test due to the internal regulations of your company. METTLER TOLEDO recommends to perform an repeatability test after cleaning the balance.
8 Press →0/T← to zero the balance.

➡ The balance has been put into operation and is ready to use.

See also

Leveling the balance ▸ Page 24
Activities - Adjustments and tests ▸ Page 84

10 Troubleshooting

Possible errors with their cause and remedy are described in the following chapter. If there are errors that cannot be corrected through these instructions, contact METTLER TOLEDO.

10.1 Error messages

Error message	Possible cause	Diagnostic	Remedy
NO STABILTY	Vibrations at the workplace.	Place beaker with tap water on the weighing table. Vibrations cause ripples on the water surface.	• Protect weighing location against vibrations (vibration absorber, etc.). • Set weighing parameters coarser (change **Environment** from **Stable** to **Standard** or even **Unstable**. • Find a different weighing location (by agreement with customer).
	Draft due to untight draft shield and /or open window.	Make sure draft shield or window is closed.	• Close draft shield or window. • Set weighing parameters coarser (change **Environment** from **Stable** to **Standard** or even **Unstable**.
	The location is not suitable for weighing.	–	Check and observe the requirements for the location, refer to "Selecting the location".
	Something is touching the weighing pan.	Check for touching parts or dirts.	Remove touching parts or clean the balance.
Adjustment aborted **Weight out of range.**	Wrong adjustment weight.	Check weight.	Place correct weight on the weighing pan.
EEPROM error.	Data in EEPROM damaged.	–	Please contact your METTLER TOLEDO-Support representative.
Wrong cell data.	Defect load cell data.	–	Please contact your METTLER TOLEDO-Support representative.
No standard adjustment.	–	–	Please contact your METTLER TOLEDO-Support representative.
Program memory defect.	–	–	Please contact your METTLER TOLEDO-Support representative.

Error message	Possible cause	Diagnostic	Remedy
Temperature sensor defect.	AC/DC adapter connected to power before connecting to the balance. Temperature sensor of load cell defect.	–	Remove the AC/DC adapter from the power and connect first to the balance before connecting to the power if persist please contact your METTLER TOLEDO-Support representative.
Wrong load cell brand.	Wrong load cell installed.	–	Please contact your METTLER TOLEDO-Support representative.
Wrong type data set.	Wrong type data set.	–	Please contact your METTLER TOLEDO-Support representative.
Memory full	Memory full.	–	Clear the memory by finishing all applications where a measurement is ongoing.
A problem occurred while starting the balance. Some data could not be read correctly from memory. Please proceed and check date and time settings. Please contact your MT-Support representative if the problem persists.	Some data could not be read correctly from memory.	Check date and time settings.	Please contact your METTLER TOLEDO-Support representative if the problem persists.
A problem occurred while starting the balance. Some data could not be read correctly from memory. The instrument will reset and restart. Please contact your MT-Support representative if the problem persists.	Some data could not be read correctly from memory.	–	Please contact your METTLER TOLEDO-Support representative.
Weight out of initial zero range	Wrong weighing pan. Pan is missing. Pan is not empty.	Check weighing pan.	Mount correct weighing pan or unload weighing pan.
Weight out of zero range	Zero range limit overrun or underrun.	–	Reduce / increase weight on weighing pan.
Weight out of tare range	Tare range limit overrun or underrun.	–	Reduce / increase weight on weighing pan.
Battery backup lost	Backup battery is empty. This battery ensures that the date and time are not lost when the balance is disconnected from power.	Connect the balance to the power supply for charging the battery (full capacity after 2 days of charging).	If battery cannot be recharged, contact your METTLER TOLEDO-Support representative.

Error message	Possible cause	Diagnostic	Remedy
USB device is not recognized when connected to balance	Fluctuation in the external electric grid. Interference from power line.	–	Restart balance.

10.2 Error symptoms

Error symptom	Possible cause	Diagnostic	Remedy
Display is dark	Instrument is switched off.	–	Switch on the instrument.
	Power plug not connected.	Check	Connect power cable to power supply.
	Power supply not connected to balance.	Check	Connect power supply.
	Power supply is faulty.	Check/test	Replace power supply.
	Wrong power supply.	Check that input data on type plate match the power supply values.	Use proper power supply.
	Balance must be restarted.	–	Restart balance.
	Connector socket on balance is corroded or faulty.	Check	Please contact your METTLER TOLEDO-Support representative.
	Display is faulty.	Replace display.	Please contact your METTLER TOLEDO-Support representative.
Touch display is not responding	Touch display is faulty.	Replace display.	Please contact your METTLER TOLEDO-Support representative.
Touch display is partly not responding	Touch display is not correctly adjusted.	–	Perform touch screen adjustment. Reset balance (factory reset).
The value drifts into plus or minus	Room, environment not suitable.	–	**Environmental recommendations** • Windowless, non air-conditioned room, e.g., basement. • Only one person in the weighing room. • Sliding doors. Standard doors cause pressure changes. • No draft in weighing room (check with suspended threads). • No air conditioning (temperature oscillates, draft). • Acclimatize balance, take dummy measurements.

Error symptom	Possible cause	Diagnostic	Remedy
			• Instrument uninterruptedly connected to the power supply (24h per day).
	Direct sunlight or other heat source.	Is any sun shade (blinds, curtains, etc.) available?	Select location according to "Selecting the location" (customer responsibility).
	Weighing sample absorbs moisture or evaporates moisture.	• Is the weighing result with a test weight stable? • Sensitive weighing samples, e.g., paper, cardboard, wood, plastic, rubber, liquids.	• Use aids. • Cover weighing sample.
	Weighing sample is electrostatically charged.	• Is the weighing result with a test weight stable? • Sensitive weighing samples, e.g., plastic, powder, insulating materials.	• Increase air humidity in weighing chamber (45% - 50%). • Use ionizer.
	Weighing sample is hotter or colder than the air in the weighing chamber.	Weighing operation with test weight does not show this effect.	Bring weighing sample to room temperature before weighing.
	Instrument has not yet reached thermal equilibrium.	• Was there a power outage? • Was power supply disconnected?	• Acclimatize instrument for at least 1 hour. Depending on climatic conditions, extend this period accordingly. • Instrument switched on for at least 1 hour, refer to "General data"
Display shows overload or underload	The weight on the weighing pan exceeds the weighing capacity of the instrument.	Check weight.	Reduce the weight on the weighing pan.
	Wrong weighing pan.	Slightly lift or press weighing pan. The weight display appears.	Use proper weighing pan.
	No weighing pan.	–	Install weighing pan.
	Incorrect zero point at switch-on.	–	• Switch off balance. • Disconnect and reconnect power cable.

10.3 Status messages/Status icons

Status messages are displayed by means of small icons. The status icons indicate the following:

Icon	Status description	Diagnostic	Remedy
FACT	Automatic **FACT** adjustment is currently not possible.	Instrument is busy.	• Unload the balance. • Do not press any key for 2 minutes. The display stabilizes.

Icon	Status description	Diagnostic	Remedy
	Service due.	–	Please contact your METTLER TOLEDO-Support representative.
	The built-in level sensor has detected that the instrument is not correctly leveled.	Instrument is out of level.	Immediately level the instrument.
	The balance battery must be replaced. This battery ensures that the date and time are retained when the balance is disconnected from the power supply.	Replace battery.	Please contact your METTLER TOLEDO-Support representative.
	LAN cable disconnected.	Check cable.	Connect the cable.
	LAN connection problem.	Settings can be modified.	Tap icon in the status field. • View corresponding settings. Link to corresponding settings in **Network and Bluetooth** area by means of "edit" function.
	WLAN not connected.	Network not selected.	Select network.
		Settings can be modified.	Tap icon in the status field. • View corresponding settings. Link to corresponding settings in **Network and Bluetooth** area by means of "edit" function.
	WLAN connected. Three bars are indicating signal strength of connection.	Settings can be modified.	Tap icon in the status field. • View corresponding settings. Link to corresponding settings in **Network and Bluetooth** area by means of "edit" function.
	WLAN secured connected. Three bars are indicating signal strength of connection.	Settings can be modified.	Tap icon in the status field. • View corresponding settings. Link to corresponding settings in **Network and Bluetooth** area by means of "edit" function.
	WLAN connection problem.	Settings can be modified.	Tap icon in the status field. • View corresponding settings. Link to corresponding settings in **Network and Bluetooth** area by means of "edit" function.
	Bluetooth ON.	Bluetooth function active, set as ON in settings. Settings can be modified.	Tap icon in the status field. • View corresponding settings. Link to corresponding settings in **Network and Bluetooth** area by means of "edit" function.

Icon	Status description	Diagnostic	Remedy
	Bluetooth not available.	Bluetooth function active (set as ON in settings) but needs dongle reset.	Tap icon in the status field, reset dongle.
		Settings can be modified.	Tap icon in the status field. • View corresponding settings. Link to corresponding settings in **Network and Bluetooth** area by means of "edit" function.
	Bluetooth not connected.	The external device has been paired but it's not connected, or the balance has been disconnected on the other device. Settings can be modified.	Check connection on external device.
	Bluetooth problem.	Bluetooth device is not in range or the connection has failed. Settings can be modified.	Check the device and/or connection. • View corresponding settings. Link to corresponding settings in **Network and Bluetooth** area by means of "edit" function.
	Connection request.	An external Bluetooth device wants to connect with balance.	Tap icon in the status field. • View corresponding workflow. Connect external device and select the device type in **Devices and services**.
	Connection request failed.	Connection with external Bluetooth device failed.	Tap icon in the status field. • View corresponding workflow. Connect external device and select the device type in **Devices and services**.
	External input device connected.	A keyboard or a barcode reader has been connected to the balance, and the balance could not recognize the device type.	Tap icon in the status field. • View corresponding workflow. Connect external device and select the device type in **Devices and services**.
	Publishing failed	One or more publishing processes have failed.	Tap icon in the status field. View corresponding message(s). All fails are recorded in the ISO-Log.

10.4 Putting into operation after fixing an error

After fixing an error, perform the following steps to put the balance into operation:

- Ensure that the balance is completely reassembled and cleaned.
- Reconnect the balance to the AC/DC adapter.

11 Technical Data

11.1 General data

Standard power supply

AC/DC adapter:	Input: 100 – 240 V AC ± 10%, 50 – 60 Hz, 0.5 A, 24 – 34 VA Output: 12 V DC, 1.0 A, LPS (Limited Power Source)
Polarity:	⊖—●—⊕
Balance power consumption:	12 V DC, 0.6 A If the balance is used above 2000 m mean sea level, the optional power supply must be used.

Optional power supply

AC/DC adapter:	Input: 100 – 240 V AC ± 10%, 50 – 60 Hz, 0.8 A, 60 – 80 VA Output: 12 V DC, 2.5 A, LPS (Limited Power Source)
Cable for AC/DC adapter:	3-core, with country-specific plug
Polarity:	⊖—●—⊕
Balance power consumption:	12 V DC, 0.6 A

Battery operation

Battery operation:	8 standard AA batteries (alkaline or lithium) for up to 8 hours for balances with a readability of 1 - 100 mg and 2 hours for balances with a readability of 0.1 mg.

Protection and standards

Overvoltage category:	II
Degree of pollution:	2
Protection:	Protected against dust and water
Standards for safety and EMC:	See Declaration of Conformity
Range of application:	Use only indoors in dry locations

Environmental conditions

Height above mean sea level:	Up to 2000 m (standard power supply) Up to 4000 m (optional power supply)
Ambient temperature:	Operating conditions for ordinary lab application: +10 °C to +30 °C (operability guaranteed between +5 °C and +40 °C)
Relative air humidity:	Max. 80% up to 31 °C, linearly decreasing to 50% at 40 °C, non-condensing
Warm-up time:	At least 30 minutes (60 minutes for 0.1 mg models) after connecting the balance to the power supply. When switched on from standby, the instrument is ready for operation immediately.

Materials

Housing:	Top Housing: ABS Bottom housing: Die-cast aluminum, powder coated
Weighing pan:	170 × 190 mm: Stainless steel X5CrNi18-10 (1.4301) ø 120 mm: Stainless steel X5CrNi18-10 (1.4301) ø 90 mm: Stainless steel X2CrNiMo 17-12-2 (1.4404) Roughness Ra < 0.8 µm

Draft shield element:	0.1 mg models: Stainless steel X2CrNiMo 17-12-2 (1.4404)
Draft shield:	ABS, glass
Protective cover:	PET
TFT touch screen surface:	Glass

11.2 Model-specific data

11.2.1 Analytical balances with a readability of 0.1 mg with draft shield

	ML54T	ML104T
Limit values		
Capacity	52 g	120 g
Nominal load	50 g	100 g
Readability	0.1 mg	0.1 mg
Repeatability	0.1 mg	0.1 mg
Linearity deviation	0.2 mg	0.2 mg
Eccentricity deviation (at test load)	0.3 mg (20 g)	0.3 mg (50 g)
Sensitivity offset (at nominal load) [1]	0.8 mg	1 mg
Sensitivity temperature drift [2]	0.0002%/°C	0.0002%/°C
Typical values		
Repeatability	0.08 mg	0.08 mg
Linearity deviation	0.06 mg	0.06 mg
Eccentricity deviation (at test load)	0.1 mg (20 g)	0.1 mg (50 g)
Sensitivity offset (at nominal load) [1]	0.5 mg	0.6 mg
Minimum weight (USP, tolerance = 0.10%) [3]	160 mg	160 mg
Minimum weight (tolerance = 1%) [3]	16 mg	16 mg
Settling time	2 s	2 s
Adjustment	Internal/FACT	Internal/FACT
Dimensions & other specifications		
Balance dimensions (W×D×H)	193×290×331 mm	193×290×331 mm
Weighing pan diameter	90 mm	90 mm
Usable height of draft shield	235 mm	235 mm
Balance weight	4.1 kg	4.1 kg
Weights for routine testing		
Weights (OIML class)	2 g (F2)/ 50 g (F2)	5 g (F2)/ 100 g (F2)
Weights (ASTM class)	2 g (ASTM 1)/ 50 g (ASTM 1)	5 g (ASTM 1)/ 100 g (ASTM 1)

[1] after adjustment with internal weight

[2] In the temperature range +10 °C – +30 °C

[3] determined at 5% load, k = 2

	ML204T	ML304T
Limit values		
Capacity	220 g	320 g
Nominal load	200 g	300 g
Readability	0.1 mg	0.1 mg
Repeatability	0.1 mg	0.1 mg
Linearity deviation	0.2 mg	0.2 mg
Eccentricity deviation (at test load)	0.4 mg (100 g)	0.4 mg (100 g)
Sensitivity offset (at nominal load) [1]	1.2 mg	2.4 mg
Sensitivity temperature drift [2]	0.0002%/°C	0.0002%/°C
Typical values		
Repeatability	0.08 mg	0.08 mg
Linearity deviation	0.06 mg	0.06 mg
Eccentricity deviation (at test load)	0.12 mg (100 g)	0.12 mg (100 g)
Sensitivity offset (at nominal load) [1]	0.8 mg	1.5 mg
Minimum weight (USP, tolerance = 0.10%) [3]	160 mg	160 mg
Minimum weight (tolerance = 1%) [3]	16 mg	16 mg
Settling time	2 s	3 s
Adjustment	Internal/FACT	Internal/FACT
Dimensions & other specifications		
Balance dimensions (W×D×H)	193×290×331 mm	193×290×331 mm
Weighing pan diameter	90 mm	90 mm
Usable height of draft shield	235 mm	235 mm
Balance weight	4.1 kg	4.1 kg
Weights for routine testing		
Weights (OIML class)	10 g (F2)/ 200 g (F2)	10 g (F2)/ 200 g (F2)
Weights (ASTM class)	10 g (ASTM 1)/ 200 g (ASTM 1)	10 g (ASTM 1)/ 200 g (ASTM 1)

[1] after adjustment with internal weight

[2] In the temperature range +10 °C – +30 °C

[3] determined at 5% load, k = 2

11.2.2 Precision balances with a readability of 1 mg with draft shield

	ML203T	ML303T	ML503T
Limit values			
Capacity	220 g	320 g	520 g
Nominal load	200 g	300 g	500 g
Readability	1 mg	1 mg	1 mg
Repeatability	1 mg	1 mg	1 mg
Linearity deviation	2 mg	2 mg	2 mg
Eccentricity deviation (at test load)	4 mg (100 g)	4 mg (100 g)	4 mg (200 g)
Sensitivity offset (at nominal load) [1]	8 mg	8 mg	8 mg
Sensitivity temperature drift [2]	0.0003%/°C	0.0003%/°C	0.0003%/°C
Typical values			
Repeatability	0.7 mg	0.7 mg	0.7 mg
Linearity deviation	0.6 mg	0.6 mg	0.6 mg
Eccentricity deviation (at test load)	1.5 mg (100 g)	1.5 mg (100 g)	1.5 mg (200 g)
Sensitivity offset (at nominal load) [1]	5 mg	5 mg	5 mg
Minimum weight (USP, tolerance = 0.10%) [3]	1.4 g	1.4 g	1.4 g
Minimum weight (tolerance = 1%) [3]	140 mg	140 mg	140 mg
Settling time	1.5 s	1.5 s	1.5 s
Adjustment	Internal/FACT	Internal/FACT	Internal/FACT
Dimensions & other specifications			
Balance dimensions (W×D×H)	193×290×331 mm	193×290×331 mm	193×290×331 mm
Weighing pan diameter	120 mm	120 mm	120 mm
Usable height of draft shield	230 mm	230 mm	230 mm
Balance weight	4.2 kg	4.2 kg	4.2 kg
Weights for routine testing			
Weights (OIML class)	10 g (F2)/ 200 g (F2)	10 g (F2)/ 200 g (F2)	20 g (F2)/ 500 g (F2)
Weights (ASTM class)	10 g (ASTM 1)/ 200 g (ASTM 1)	10 g (ASTM 1)/ 200 g (ASTM 1)	20 g (ASTM 1)/ 500 g (ASTM 1)

[1] after adjustment with internal weight

[2] In the temperature range +10 °C – +30 °C

[3] determined at 5% load, k = 2

11.2.3 Precision balances with a readability of 10 mg

	ML802T	ML1602T	ML3002T
Limit values			
Capacity	820 g	1620 g	3.2 kg
Nominal load	800 g	1600 g	3 kg
Readability	10 mg	10 mg	10 mg
Repeatability	10 mg	10 mg	10 mg
Linearity deviation	20 mg	20 mg	20 mg
Eccentricity deviation (at test load)	30 mg (500 g)	30 mg (500 g)	40 mg (1000 g)
Sensitivity offset (at nominal load) [1]	80 mg	80 mg	80 mg
Sensitivity temperature drift [2]	0.0003%/°C	0.0003%/°C	0.0003%/°C
Typical values			
Repeatability	7 mg	7 mg	7 mg
Linearity deviation	6 mg	6 mg	6 mg
Eccentricity deviation (at test load)	10 mg (500 g)	10 mg (500 g)	15 mg (1000 g)
Sensitivity offset (at nominal load) [1]	50 mg	50 mg	50 mg
Minimum weight (USP, tolerance = 0.10%) [3]	14 g	14 g	14 g
Minimum weight (tolerance = 1%) [3]	1.4 g	1.4 g	1.4 g
Settling time	1.5 s	1.5 s	1.5 s
Adjustment	Internal/FACT	Internal/FACT	Internal/FACT
Dimensions & other specifications			
Balance dimensions (W×D×H)	184×290×84 mm	184×290×84 mm	184×290×84 mm
Weighing pan dimensions (W×D)	170×190 mm	170×190 mm	170×190 mm
Usable height of draft shield	–	–	–
Balance weight	3.6 kg	3.6 kg	3.6 kg
Weights for routine testing			
Weights (OIML class)	20 g (F2)/ 500 g (F2)	50 g (F2)/ 1000 g (F2)	100 g (F2)/ 2000 g (F2)
Weights (ASTM class)	20 g (ASTM 1)/ 500 g (ASTM 1)	50 g (ASTM 1)/ 1000 g (ASTM 1)	100 g (ASTM 1)/ 2000 g (ASTM 1)

[1] after adjustment with internal weight

[2] In the temperature range +10 °C – +30 °C

[3] determined at 5% load, k = 2

	ML4002T	ML6002T
Limit values		
Capacity	4.2 kg	6.2 kg
Nominal load	4 kg	6 kg
Readability	10 mg	10 mg
Repeatability	10 mg	10 mg
Linearity deviation	20 mg	20 mg
Eccentricity deviation (at test load)	40 mg (2 kg)	60 mg (2 kg)
Sensitivity offset (at nominal load) [1]	80 mg	80 mg
Sensitivity temperature drift [2]	0.0003%/°C	0.0003%/°C
Typical values		
Repeatability	7 mg	7 mg
Linearity deviation	6 mg	6 mg
Eccentricity deviation (at test load)	15 mg (2 kg)	20 mg (2 kg)
Sensitivity offset (at nominal load) [1]	50 mg	50 mg
Minimum weight (USP, tolerance = 0.10%) [3]	14 g	14 g
Minimum weight (tolerance = 1%) [3]	1.4 g	1.4 g
Settling time	1.5 s	1.5 s
Adjustment	Internal/FACT	Internal/FACT
Dimensions & other specifications		
Balance dimensions (W×D×H)	184×290×84 mm	184×290×84 mm
Weighing pan dimensions (W×D)	170×190 mm	170×190 mm
Usable height of draft shield	–	–
Balance weight	3.6 kg	3.6 kg
Weights for routine testing		
Weights (OIML class)	200 g (F2)/ 2000 g (F2)	200 g (F2)/ 5000 g (F2)
Weights (ASTM class)	200 g (ASTM 4)/ 2000 g (ASTM 4)	200 g (ASTM 4)/ 5000 g (ASTM 4)

[1] after adjustment with internal weight

[2] In the temperature range +10 °C – +30 °C

[3] determined at 5% load, k = 2

11.2.4 Precision balances with a readability of 100 mg

	ML3001T	ML6001T
Limit values		
Capacity	3.2 kg	6.2 kg
Nominal load	3 kg	6 kg
Readability	100 mg	100 mg
Repeatability	100 mg	100 mg
Linearity deviation	50 mg	200 mg
Eccentricity deviation (at test load)	300 mg (1000 g)	300 mg (2 kg)
Sensitivity offset (at nominal load) [1)]	210 mg	300 mg
Sensitivity temperature drift [2)]	0.0005%/°C	0.0005%/°C
Typical values		
Repeatability	70 mg	70 mg
Linearity deviation	20 mg	60 mg
Eccentricity deviation (at test load)	100 mg (1000 g)	100 mg (2 kg)
Sensitivity offset (at nominal load) [1)]	120 mg	150 mg
Minimum weight (USP, tolerance = 0.10%) [3)]	140 g	140 g
Minimum weight (tolerance = 1%) [3)]	14 g	14 g
Settling time	1 s	1 s
Adjustment	Internal/FACT	Internal/FACT
Dimensions & other specifications		
Balance dimensions (W×D×H)	184×290×84 mm	184×290×84 mm
Weighing pan dimensions (W×D)	170×190 mm	170×190 mm
Usable height of draft shield	–	–
Balance weight	3.3 kg	3.3 kg
Weights for routine testing		
Weights (OIML class)	200 g (F2)/ 2000 g (F2)	200 g (F2)/ 5000 g (F2)
Weights (ASTM class)	200 g (ASTM 4)/ 2000 g (ASTM 4)	200 g (ASTM 4)/ 5000 g (ASTM 4)

1) after adjustment with internal weight

2) In the temperature range +10 °C – +30 °C

3) determined at 5% load, k = 2

11.3 Dimensions

11.3.1 Balances with a readability of 0.1 mg with draft shield (235 mm)

Models:

ML54T
ML104T
ML204T
ML304T

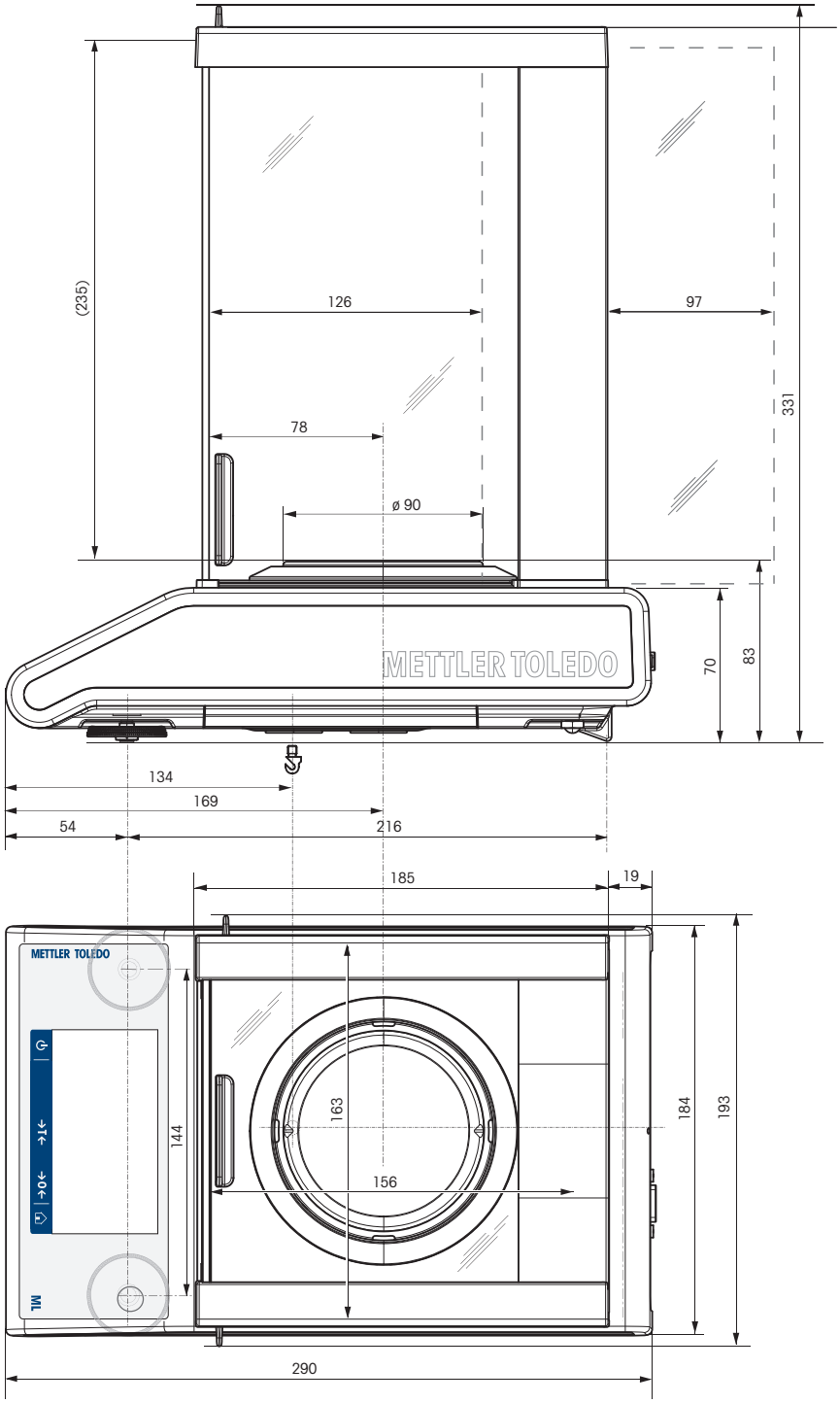

11.3.2 Balances with a readability of 1 mg with draft shield (235 mm)

Models:

ML203T
ML303T
ML503T

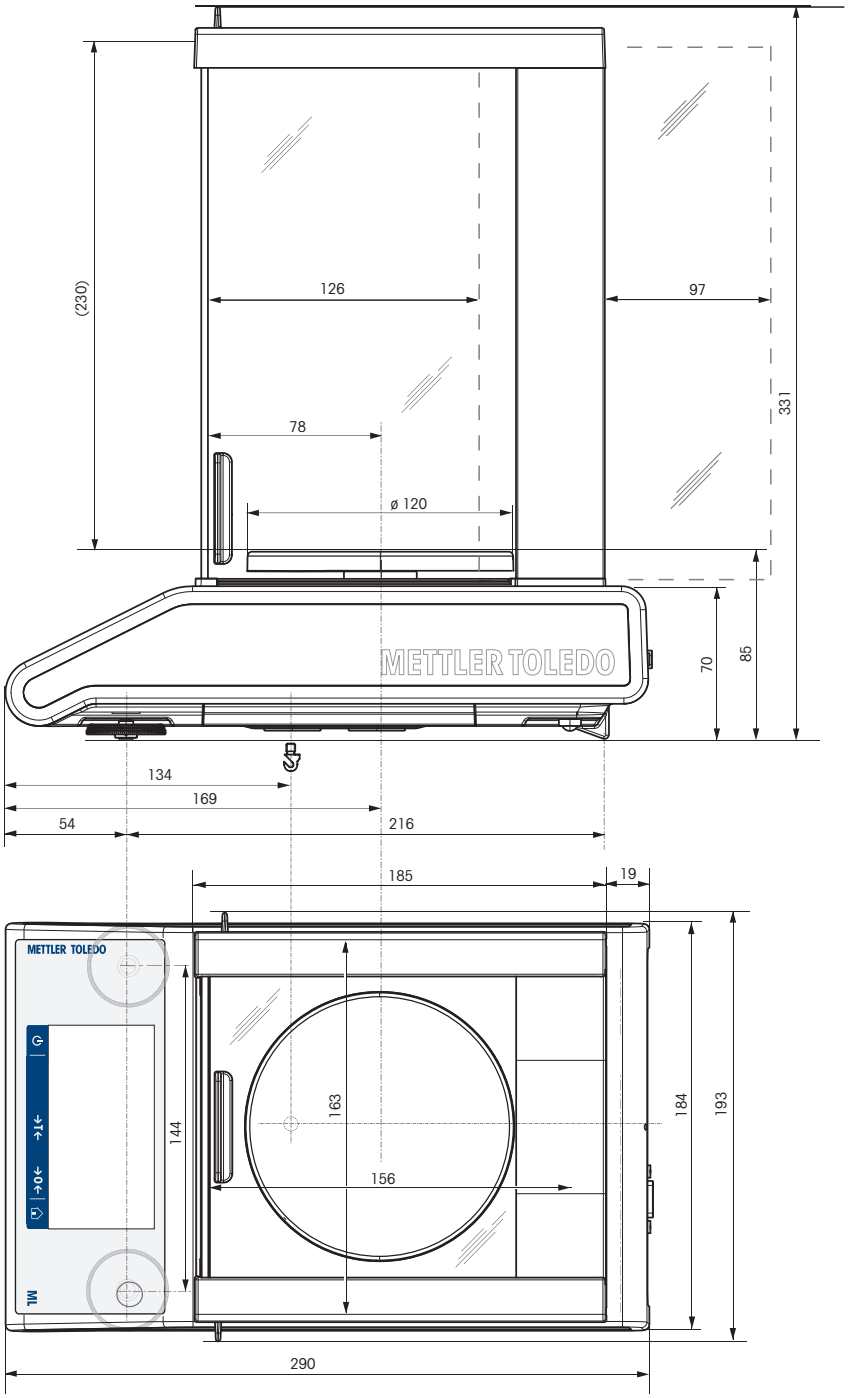

11.3.3 Balances with a readability of 10 mg with square weighing pan and draft shield element

Models:

ML802T
ML1602T
ML3002T
ML4002T
ML 6002T

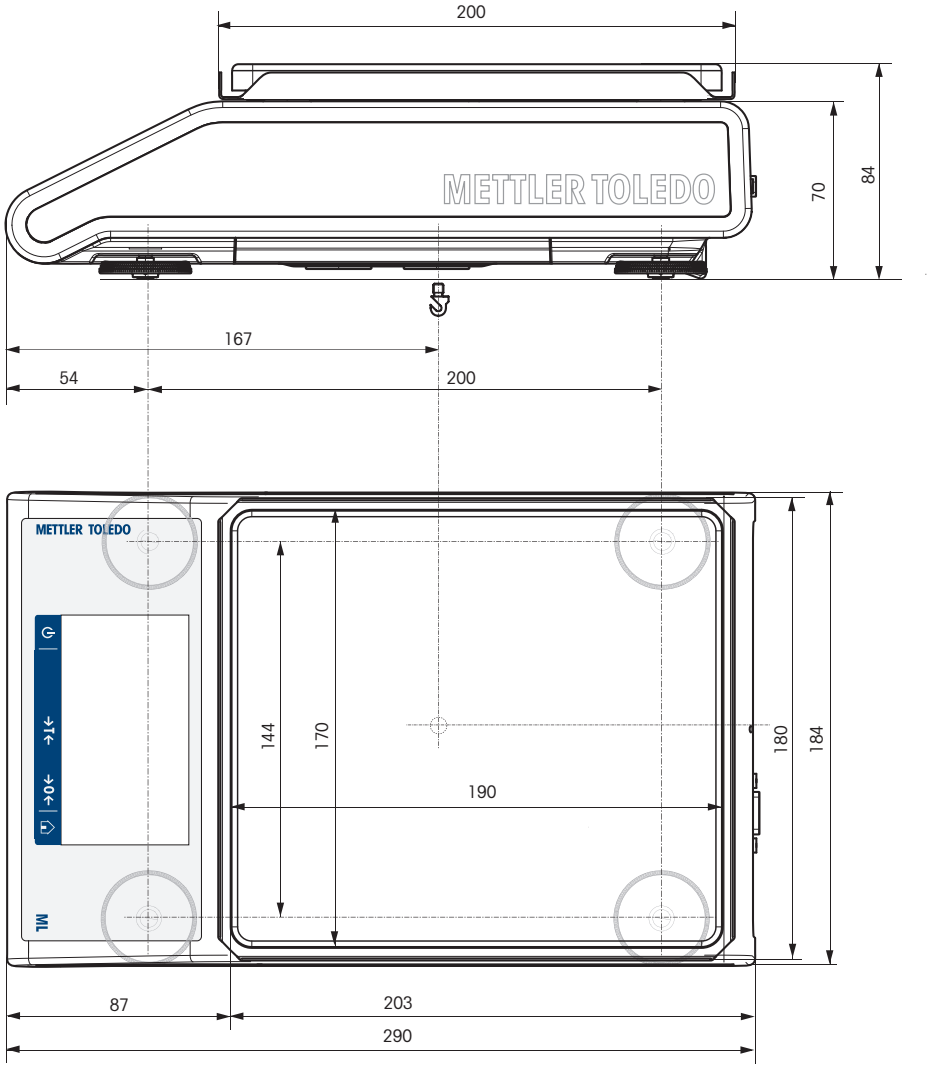

11.3.4 Balances with a readability of 100 mg with square weighing pan

Models:

ML3001T

ML6001T

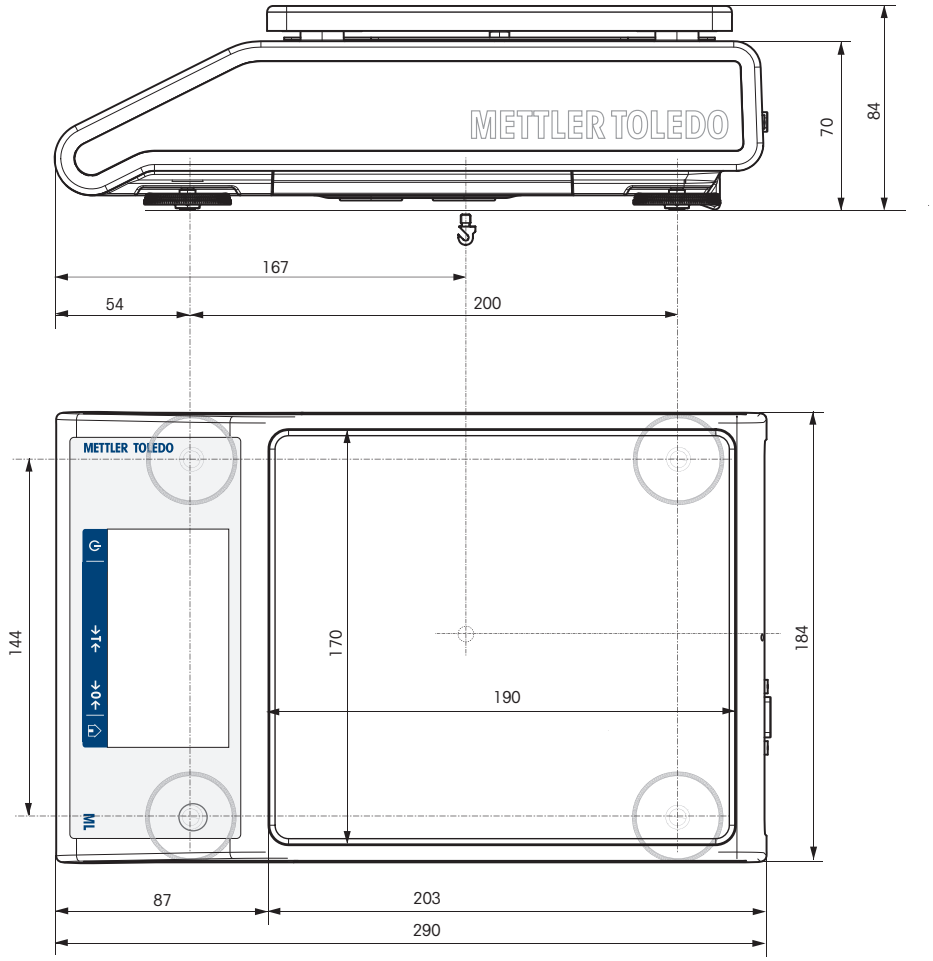

11.4 Interface specifications

11.4.1 RS232C interface

Each balance is equipped with a RS232C Interface as standard for the attachment of a peripheral device, e.g., a printer or a computer.

Schematic	Item	Specification
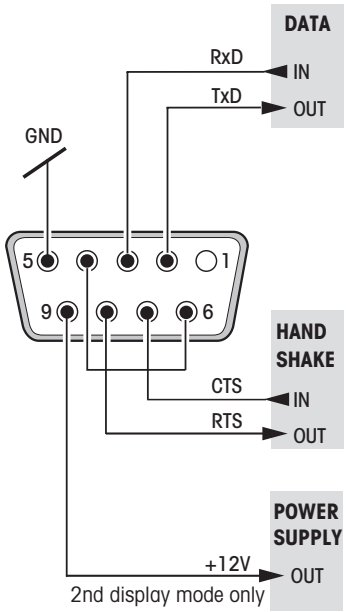	Interface type	Voltage interface according to EIA RS232C/ DIN66020 CCITT V24/V.28)
	Max. cable length	15 m
	Signal level	Outputs: +5 V … +15 V (RL = 3–7 kΩ) –5 V … –15 V (RL = 3–7 kΩ) Inputs: +3 V … +25 V –3 V … -25 V
	Connector	Sub-D, 9-pole, female
	Operating mode	Full duplex
	Transmission mode	Bit-serial, asynchronous
	Transmission code	ASCII
	Baud rates	600, 1200, 2400, 4800, 9600, 19200, 38400 (software selectable)
	Bits/parity	7-bit/none, 7-bit/even, 7-bit/odd, 8-bit/none (software selectable)
	Stop bits	1 stop bit
	Handshake	None, XON/XOFF, RTS/CTS (software selectable)
	End-of-line	<CR><LF>, <CR>, <LF> (software selectable)
	Power supply for 2nd display	+ 12 V, max 40 mA (software selectable, 2nd display mode only)

11.4.2 USB host

Each balance is equipped with a USB host as standard for the attachment of a peripheral device, e.g., printer, barcode reader.

Schematic	Item	Specification	
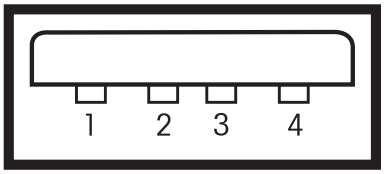	Standard	In conformity with USB specifications revision 2.0	
	Speed	Full-speed 12 Mbps (requires shielded cable)	
	Power usage	Max. 500 mA	
	Connector	Type A	
	Pin assignment	1	VBUS (+5 V DC)
		2	D- (Data -)
		3	D+ (Data +)
		4	GND (Ground)
		Shell	Shield

11.4.3 USB device

Each balance is equipped with a USB device interface as standard for the attachment of a peripheral device, e.g. a computer.

Note

This interface is not able to communicate with a printer.

Schematic	Item	Specification
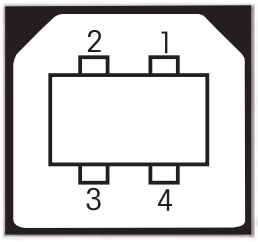	Standard	In conformity with USB specifications revision 2.0
	Speed	Full-speed 12 Mbps (requires shielded cable)
	Function	CDC (Communication Device Class) serial port emulation
	Power usage	Suspended device: Max 10 mA
	Connector	Type B

1	VBUS (+5 VDC)
2	D– (Data –)
3	D+ (Data +)
4	GND (Ground)
Shield	Shield

11.4.4 Ethernet

Each balance is equipped with an Ethernet interface as standard to connect to a LAN or a P-50 printer.

Item	Specification
Connection	RJ45
Speed	10/100 Mbps (10BASE-T, 100BASE-TX, Auto MDI-X)
Recommended Ethernet cable	Cat 5
Supported Ethernet standard	IEEE 802.3
Supported network protocols and services	TCP/IP, FTP

11.4.5 Wi-Fi and Bluetooth

There is the optional METTLER TOLEDO wireless dongle (MTICWD-100, part number 30412536) to connect to a WLAN and Bluetooth devices.

Wi-Fi

Item	Specification
Connection	USB 2.0 (bus powered device)
Wi-Fi RF transmission standards	IEEE 802.11 a/b/g/n (2.4 and 5 GHz)
Wi-Fi output power	max. 15 dBm
Supported security protocols	Open / WPA / WPA2 / LEAP / PEAP
Supported network protocols and services	TCP/IP, FTP

Bluetooth

Item	Specification
Connection	USB 2.0 (bus powered device)
Bluetooth transmission standards	BR/EDR v2.1/Low Energy v4.0 (2.4 GHz)
Bluetooth output power	max. 11 dBm
Transmission range	up to 100 m
Supported Bluetooth profiles	SPP (Serial Port Profile)
Supported security modes	BT2.0: fixed-pin BT4.0: Display Yes/No

11.4.6 MT-SICS interface commands and functions

Many of the instruments and balances used have to be able to integrate into a complex computer or data acquisition system.

To easily integrate a balance into a system and utilize its capacity to the full extent, most balance functions are also available as corresponding commands via the data interface.

All new METTLER TOLEDO balances launched on the market support "METTLER TOLEDO Standard Interface Command Set" (MT-SICS). The commands available depend on the functionality of the balance.

For further information, please contact your METTLER TOLEDO representative.

Refer to the MT-SICS Reference Manual.

▶ www.mt.com/library

12 Accessories and Spare Parts

12.1 Accessories

Accessories are additional components that could help you in your workflow.

	Description	Order no.
Printers		
	RS-P25 printer with RS232C connection to instrument	30702967
	Paper roll (length: 20 m), set of 5 pcs	00072456
	Paper roll (length: 13 m), self-adhesive, set of 3 pcs	11600388
	Ribbon cartridge, black, set of 2 pcs	00065975
	RS-P26/01 (EMEA) printer with RS232C connection to instrument (with date and time)	11124303
	Paper roll (length: 20 m), set of 5 pcs	00072456
	Paper roll, self-adhesive (length: 13 m), set of 3 pcs	11600388
	Ribbon cartridge, black, set of 2 pcs	00065975
	RS-P26/02 (Asia-Pacific) printer with RS232C connection to instrument (with date and time)	11124313
	Paper roll (length: 20 m), set of 5 pcs	00072456
	Paper roll (length: 13 m), self-adhesive, set of 3 pcs	11600388
	Ribbon cartridge, black, set of 2 pcs	00065975
	RS-P26/03 (Northern America) printer with RS232C connection to instrument (with date and time)	11124323
	Paper roll (length: 20 m), set of 5 pcs	00072456
	Paper roll, self-adhesive (length: 13 m), set of 3 pcs	11600388
	Ribbon cartridge, black, set of 2 pcs	00065975
	RS-P28/01 (EMEA) printer with RS232C connection to instrument (with date, time and applications)	11124304
	Paper roll (length: 20 m), set of 5 pcs	00072456
	Paper roll, self-adhesive (length: 13 m), set of 3 pcs	11600388
	Ribbon cartridge, black, set of 2 pcs	00065975
	RS-P28/02 (Asia-Pacific) printer with RS232C connection to instrument (with date, time and applications)	11124314
	Paper roll (length: 20 m), set of 5 pcs	00072456
	Paper roll (length: 13 m), self-adhesive, set of 3 pcs	11600388
	Ribbon cartridge, black, set of 2 pcs	00065975

RS-P28/03 (Northern America) printer with RS232C connection to instrument (with date, time and applications)	11124324
Paper roll (length: 20 m), set of 5 pcs	00072456
Paper roll, self-adhesive (length: 13 m), set of 3 pcs	11600388
Ribbon cartridge, black, set of 2 pcs	00065975

USB-P25 printer with USB connection to instrument	30702998
Paper roll (length: 20 m), set of 5 pcs	00072456
Paper roll (length: 13 m), self-adhesive, set of 3 pcs	11600388
Ribbon cartridge, black, set of 2 pcs	00065975

P-52RUE dot matrix printer RS232C, USB and Ethernet connections, simple print-outs	30237290
Paper roll (length: 20 m), set of 5 pcs	00072456
Paper roll (length: 13 m), self-adhesive, set of 3 pcs	11600388
Ribbon cartridge, black, set of 2 pcs	00065975

P-56RUE thermal printer with RS232C, USB and Ethernet connections, simple print-outs, date and time	30094673
Paper roll, white (length: 27 m), set of 10 pcs	30094723
Paper roll, white, self-adhesive (length: 13 m), set of 10 pcs	30094724

P-58RUE thermal printer with RS232C, USB and Ethernet connections, simple print-outs, date and time, label printing, balance applications, e.g., statistics, formulation, totaling	30094674
Paper roll, white (length: 27 m), set of 10 pcs	30094723
Paper roll, white, self-adhesive (length: 13 m), set of 10 pcs	30094724
Paper roll, white, self-adhesive labels (550 labels), set of 6 pcs	30094725
Dimension of the label 56×18 mm	

Cables for RS232C interfaces

RS9 connection cable (to connect the instrument to a PC)	11101051
Length: 1 m	

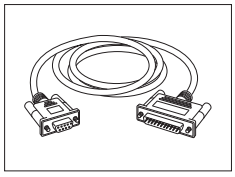

RS9 – RS25 (m/f): connection cable for PC, length = 2 m	11101052

USB-RS232 cable (to connect a balance via RS232C to a USB port) 64088427

Cables for USB interface

USB 2.0 High-speed cable to connect balance with PC (USB A to USB B), length = 1 m 30241476

Wireless interfaces

Bluetooth RS232C serial adapter ADP-BT-S 30086494

For wireless connection between:

- instrument and computer (depending on the instrument model)
- printer and instrument

Bluetooth RS232C serial adapter ADP-BT-P, set of 2 pcs 30086495

For wireless connection between:

- Instrument and PC (depending on the instrument model)
- Printer and instrument

Wireless dongle MTICWD-100 30412536

Wireless dongle to connect to a WLAN network and/or via Bluetooth to a P-50RUE Printer or PC/Android Mobile Device (Balance software version 4.10 or higher required).

The wireless dongle is connected to the USB Host interface.

To connect to a P-50 RUE Printer the Bluetooth RS232C serial adapter ADP-BT-S (30086494) needs to be connected to the printer.

Density determination

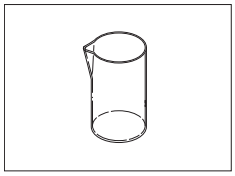

Glass beaker, height 100 mm, ø 60 mm 00238166

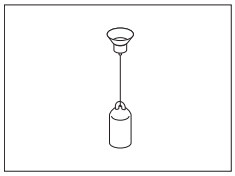

Sinker for density of liquids in conjunction with density kit 00210260

Calibrated (sinker + certificate) 00210672

Recalibrated (new certificate) 00210674

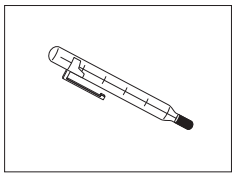

Calibrated thermometer with certificate 11132685

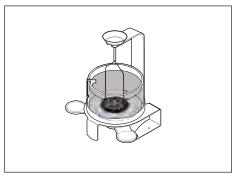

Density Kit Advanced & Standard for balance models with a readability of 0.1 mg / 1 mg 30535760

Draft shields

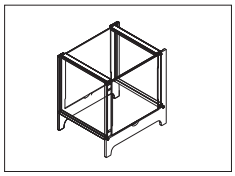

Draft shield ML-DS-21 for models with readability of 10 mg up to 100 mg. 12121015

Auxiliary displays

RS232C auxiliary display AD-RS-M7 12122381

Pan protections

Protective covers

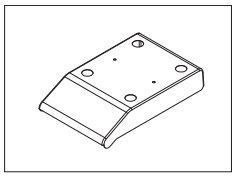

Protective cover for models with square weighing pan 30241513

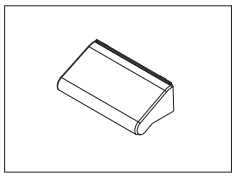

Protective cover for models with draft shield "165/235 mm" 30241514

Anti-theft devices

Anti-theft cable with lock 11600361

Software

EasyDirect Balance is an application software to collect, analyze, store and export balance measurement and device data on PC.

License EasyDirect Balance for 10 Instruments	30540473
License EasyDirect Balance for 3 Instruments	30539323

Various

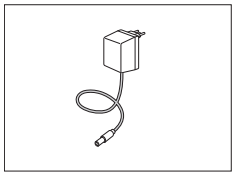

AC/DC universal adapter (EU, USA, AU, UK) 100–240 VAC, 50/60 Hz, 0.5 A, 12 VDC 1 A — 11120270

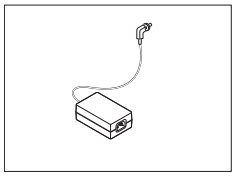

AC/DC adapter (without power cable) — 11107909

- Input: 100 – 240 V AC, 50/60 Hz, 0.8 A
- Output: 12 V DC, 2.5 A

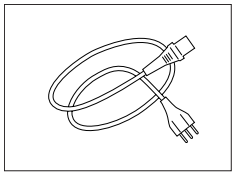

Country-specific 3-Pin power cable with grounding conductor.

Power cable AU	00088751
Power cable BR	30015268
Power cable CH	00087920
Power cable CN	30047293
Power cable DK	00087452
Power cable EU	00087925
Power cable GB	00089405
Power cable IL	00225297
Power cable IN	11600569
Power cable IT	00087457
Power cable JP	11107881
Power cable TH, PE	11107880
Power cable US	00088668
Power cable ZA	00089728

Adjustment weights

OIML / ASTM Weights (with calibration certificate)
see www.mt.com/weights

12.2 Spare parts

Spare parts are parts that are delivered with the original instrument but that can be replaced, if needed, without the help of a service technician.

Balances with readability of 0.1 mg, with draft shield (235 mm)

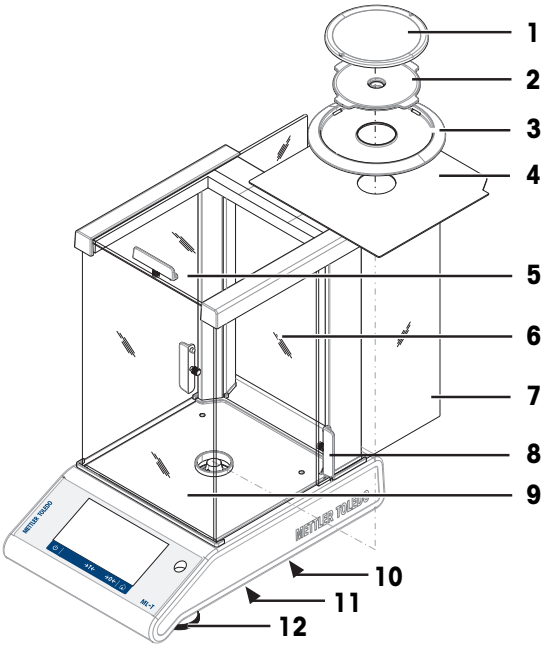

	Order no.	Designation	Remarks
1	12122010	Weighing pan ø 90 mm	Excluding: Pan support
2	12122042	Pan support ø 90 mm	–
3	12122043	Draft protection ring	For weighing pan Ø 90 mm
4	12122044	Bottom plate	–
5	12122033	Top glass door	–
6	30241516	Rear glass	–
7	12122036	Side glass door	–
8	12122035	Pair of handles	–
9	30241515	Front glass	–
10	12122029	Weighing below balance cap	–
11	12122041	Battery chamber cover	–
12	12122040	Leveling foot	–

Balances with readability of 1 mg, with draft shield (235 mm)

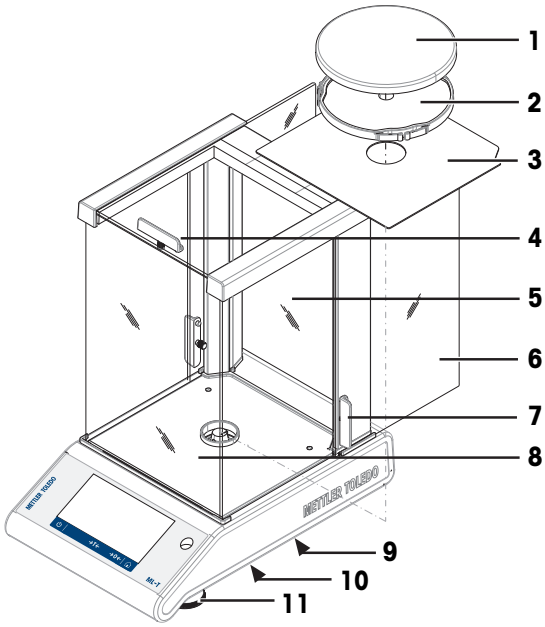

	Order no.	Designation	Remarks
1	12122037	Weighing pan ø 120 mm	–
2	12122045	Pan support ø 120 mm	–
3	12122044	Bottom plate	–
4	12122033	Top glass door	–
5	30241516	Rear glass	–
6	12122036	Side glass door	–
7	12122035	Pair of handles	–
8	30241515	Front glass	–
9	12122029	Weighing below balance cap	–
10	12122041	Battery chamber cover	–
11	12122040	Leveling foot	–

Balances with readability of 10 mg with square weighing pan and draft shield element

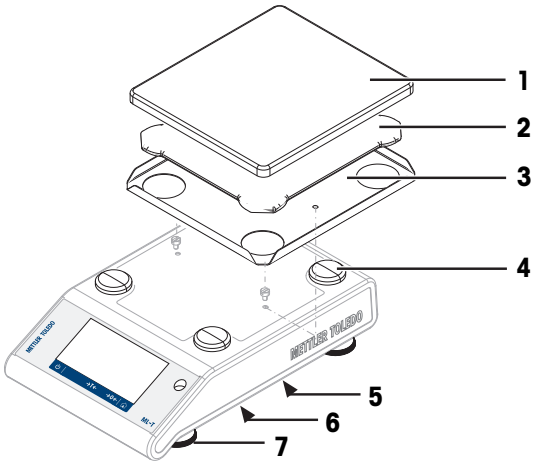

	Order no.	Designation	Remarks
1	12122048	Weighing pan 170×190 mm	–
2	12122049	Pan support 170×190 mm	–
3	12122050	Draft shield element	–
4	11131029	Cap pan support	–
5	12122029	Weighing below balance cap	–
6	12122041	Battery chamber cover	–
7	12122040	Leveling foot	–

Balances with readability of 100 mg with square weighing pan

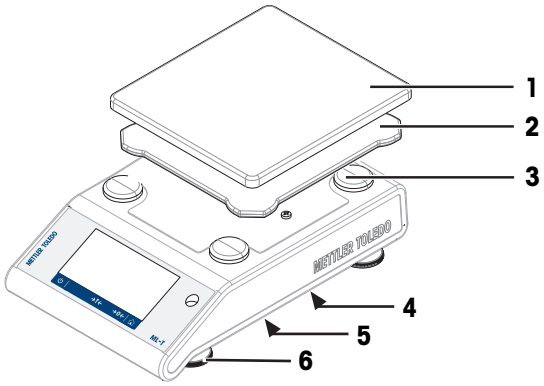

	Order no.	Designation	Remarks
1	12122048	Weighing pan 170×190 mm	–
2	12122049	Pan support 170×190 mm	–
3	11131029	Cap pan support	–
4	12122029	Weighing below balance cap	–
5	12122041	Battery chamber cover	–
6	12122040	Leveling foot	–

13 Disposal

In conformance with the European Directive 2012/19/EU on Waste Electrical and Electronic Equipment (WEEE) this device may not be disposed of in domestic waste. This also applies to countries outside the EU, per their specific requirements.

Please dispose of this product in accordance with local regulations at the collecting point specified for electrical and electronic equipment. If you have any questions, please contact the responsible authority or the distributor from which you purchased this device. Should this device be passed on to other parties, the content of this regulation must also be related.

14 Appendix

14.1 Compliance information

European Union

The instrument complies with the directives and standards listed on the EU Declaration of Conformity.

United States of America

This equipment has been tested and found to comply with the limits for a **Class A** digital device, pursuant to part 15 of the FCC Rules. These limits are designed to provide reasonable protection against harmful interference when the equipment is operated in a commercial environment. This equipment generates, uses, and can radiate radio frequency energy and, if not installed and used in accordance with the instruction manual, may cause harmful interference to radio communications. Operation of this equipment in a residential area is likely to cause harmful interference in which case the user will be required to correct the interference at his own expense.

This device complies with Part 15 of the FCC Rules. Operation is subject to the following two conditions:

1. This device may not cause harmful interference.
2. This device must accept any interference received, including interference that may cause undesired operation.

Changes or modifications not expressly approved by the party responsible for compliance could void the user's authority to operate the equipment.

The FCC Supplier Declaration of Conformity is available online.

▶ http://www.mt.com/ComplianceSearch

Index

A

AC/DC adapter 116
Access rights 48
Accessories 131
Action buttons 13
Activities 13
- Back-weighing 75
- Check weighing 67
- Counting 63
- Density 81
- Dynamic weighing 78
- Factor weighing 83
- Formula 70
- Percent weighing 80
- Totaling 72
- Weighing 61

Applications 60
Adjusting 25
Adjustments 84
Adjustments and tests 84
Advanced options 45
Application home screen 13
Auto lock
- Auto lock function 47

Autoincrement 57
Autopublish 39

B

Backlight 45
Back-weighing 75
Balance history 53
Balance information 13
Barcode reader 39, 98
Battery operation 21
Baudrate 41
Beep 31
Below-the-balance weighing 28
Bit/Parity 41
Bluetooth 97, 130
Bluetooth devices 39

C

Changing the readability 27
Changing the time 23
Check weighing 67
Cleaning 104, 105
Coach text field 13
Command host 38
Compliance information 6
convention 5
Conventions and symbols 5
Counting 63

D

Date 23
Defining reference piece number 64
Defining statistics 58
Defining the measuring time 78
Defining tolerance threshold 68
Density 81
Density kit 134
Devices and services 39
Dimensions 124
Display results 59, 71, 73
Disposal 140
Dosing 33
Draft shield 19
Dynamic weighing 78

E

EasyDirectBalance 93
Entering characters and numbers 14
Environment 33
environmental condition 18
Environmental conditions 116
Ethernet 129
Export report file 36

F

FACT 84
Factor weighing 83
Fill up 70
Fill up sample 70
Formula 70
FTP server 39
Function PC-Direct 90

G

General configuration and data 33
- Publishing 35
- System settings 44
- USB device 41

General settings 30
Groups 48

H

Handshake 41
History 53
Host 129

I

Identification dialog screen 56
Information and work bars 13
Information fields 13
Input prompt 57
install
  site 18
Installing the components 19
Interface
  MT-SICS 130
  USB device 129
Interface RS232C 128
Internal adjustment 84
ISO-Log 53

L

LAN 39, 93, 103, 129
Language 31
Level indicator 24
Leveling 24
Leveling assistant 24, 32
Leveling foot 9
Leveling the balance 24
location 18

M

Main activity configuration 13
Main navigation 13
Materials 116
Measuring time 78
Memory stick 100
MinWeigh 34
MT-SICS 130
MT-SICS commands 103

N

Navigation 16
Net 26
Network devices 39

O

Operating temperature 23
Operation keys 9
Overview 12

P

Password 32
  User password 47
PC software 93
PC-Direct 38, 90
Percent weighing 80
Performing a dynamic weighing 79
Performing a simple weighing 25
Performing formula 70
power supply 116
  see AC/DC adapter 116
Print 13, 27, 36
Print report 36
Printer 39, 95, 97
Protection and standards 116
Publishing 35

R

Reference piece number 64
Reset balance 45
RS232C interface 39, 41, 128

S

Safety information 7
  Signal words 7
  Warning symbols 7
Sample ID 98
Setting FACT 84
Settings/preferences 13
Short balance information 13
Signal words 7
Simple weighing 25
Sleep mode 45
Sound 31
Statistics 58
Statistics configuration 58
Status icons 113
Status information field 13
Status messages 113
Switching off 27
Switching the weighing unit 26
symbol 5

System settings 44

T

Taring 26
Technical data 116
Technical data dimensions 124
Threshold 67
Time 23
Totaling 72
Touch beep 31
Transmit data 27
transport
long distance 28
Transport over short distances 28
Transporting the balance 28

U

USB 39
USB cable 95
USB device 41
USB device interface 89, 129
USB driver installing 89
USB host 129
USB Host interface 39
USB keyboard 99
User interface 11
User management 47
Users 49

V

Value bar 13

W

Warm-up time 23
Warning symbols 7
Weighing 61
Weighing information bar 13
Weighing mode 33
Weighing unit 13
Weighing value field 13
Weighing-in aid 13
Wi-Fi 130
Wireless dongle 43, 97
WLAN 39, 130
Work title bar 13
Workflow feedback beep 31

Z

Zero setting 26

GWP®

Good Weighing Practice™

GWP® is the global weighing standard, ensuring consistent accuracy of weighing processes, applicable to all equipment from any manufacturer It helps to:

- Choose the appropriate balance or scale
- Calibrate and operate your weighing equipment with security
- Comply with quality and compliance standards in laboratory and manufacturing

www.mt.com/GWP

www.mt.com/balances

For more information

Mettler-Toledo GmbH
Im Langacher 44
8606 Greifensee, Switzerland
www.mt.com/contact

Subject to technical changes.
© Mettler-Toledo GmbH 01/2022
30203950H en

30203950