Pre-Installation Guide

LabX

LabX Version 13.1



METTLER TOLEDO

Table of Contents

1 Introduction 3
1.1 Trademarks 3

2 Purpose of the software 4

3 Purpose of this document 5

4 How to use the document 6

5 System specifications 7
5.1 Available systems 7
5.2 Licensing structure 7
5.2.1 LabX™ Starter Packs 8
5.2.2 Instrument licenses 8
5.2.3 Option licenses 8
5.2.4 LabX Express to Server Sidegrade 9
5.3 Languages 9

6 Software specifications 10
6.1 Client components 10
6.2 Server components 10
6.3 Third party components 10
6.4 Other 3rd-Party components 10

7 System dimension and scalabilities 11

8 Typical installation / Preparing the installation 13
8.1 Single PC 13
8.1.1 Introduction 13
8.1.2 System requirements 13
8.1.3 Supported operating systems 13
8.1.4 Supported SQL servers 13
8.1.5 Additional software 14
8.1.6 Connected instruments 14
8.1.7 Network and firewalls 15
8.1.8 Security and backup 16
8.1.9 Checklist single PC 17
8.2 Distributed System 18
8.2.1 Introduction 18
8.2.2 Additional software 18
8.2.3 Connected instruments 18
8.2.4 Network and firewalls 19
8.2.5 Security and backup 21
8.2.6 Windows Time Service 21
8.2.7 Client 22
8.2.7.1 System requirements 22
8.2.7.2 Operating systems 22
8.2.7.3 Checklist 23
8.2.8 Server 24
8.2.8.1 System requirements 24
8.2.8.2 Supported operating systems 24
8.2.8.3 Supported SQL servers 25
8.2.8.4 Checklist 26
8.3 Virtualized environement 27

9 METTLER TOLEDO support 28

10 Appendix 29
10.1 Compatibility matrix 30
10.2 Upgrade or downgrade of instrument software 35

10.3 CPU benchmarks 37
10.4 Accessories 37
10.4.1 Fingerprint Reader 37
10.4.2 Barcode Reader 38
10.4.3 Label Printer 38
10.5 Security and rights 38
10.5.1 Configuring Single Sign-On (SSO) 39
10.6 Handling of passwords in LabX 40
10.7 Service dependencies 41
10.8 Network performance 41
10.9 Arithmetic model 41
10.9.1 Computations and accuracy 41
10.9.2 Infinity and NaN 42
10.9.3 Rounding 42
10.9.4 Trailing zeroes in calculations and results 42
10.9.5 Significant digits 43
10.9.6 Standard deviation 43

1 Introduction

Welcome to METTLER TOLEDO LabX

LabX is a high quality software designed and built by METTLER TOLEDO assuring the highest integration, compatibility and reliability.

Congratulations on your choice of LabX as a system to be closely evaluated and welcome to our fast growing community of LabX users. LabX is a single software for multiple instruments bringing instrument control and data control to your Lab.

LabX is by design a client server application so that users can work entirely from either the touchscreen of the instrument or from any of the connected PCs. Starting with connecting one instrument on a local system to up to 60 instruments per server, your LabX system can grow with your needs even into a multiple server and distributed system.

LabX as part of METTLER TOLEDO product portfolio benefits from a world wide service of competence provided locally by your METTLER TOLEDO partner of trust. That assures the excellent services you as a METTLER TOLEDO customer are used to.

LabX is delivered on a write protected USB flash drive which ensures that no data can be written or deleted on the drive. This write protected mode allows the same security level as a DVD.

1.1 Trademarks

LabX is either a registered trademark or a trademark of Mettler-Toledo GmbH in Switzerland and/or other countries.

Excel is a registered trademark of Microsoft Corporation in the United States and/or other countries.

Windows, Windows 8, Windows 10 and Windows 11 are registered trademarks of Microsoft Corporation in the United States and/or other countries.

Microsoft .NET Framework and SQL Server are registered trademarks of Microsoft Corporation in the United States and/or other countries.

Adobe Acrobat Reader is a registered trademark of Adobe Systems Incorporated in the United States and/or other countries.

All other trademarks are the property of their respective owners.

2 Purpose of the software

LabX is a single laboratory software for multiple instruments that brings instrument control and data control to the following benchtop instruments:

- Excellence balances XP / XS / XPE / XSE
- Excellence balances XPR / XSR
- Quantos, automatic dosing systems
- Titration Excellence T50 / T70 / T90
- Titration Excellence T5 / T7 / T9
- Compact Titration G20 / G20 S only with LabX Express Edition and not in combination with the option Regulation.
- Compact Titration V20 / V30 / C20 / C30
- Compact Titration V20 S / V30 S / C20 S / C30 S
- SevenExcellence™ multi parameter instruments
- UV/VIS Excellence spectrophotometers
- Thermal Value Excellence, melting point systems MP70 / MP80 / MP90
- Density meters and refractometers DM40 / DM45 / DM50 / RM40 / RM50 / DX40 / DX45 / DX50 / X40 / RX50
- Density meters and refractometers D4 / D5 / D6 / R4 / R5 / RX4 / RX5

Regulations like 21 CFR part 11, EU Annex 11, and the aspects of GMP are fully supported and validation services qualify the system at point of installation.

The unique design of LabX allows users to work from the computer or the instrument, or from both. The instrument becomes like any other client within the network, connected to the same server database.

The LabX system is at the instrument level controlling the instruments and securing the data. This complete solution can in turn be connected to other Lab systems like ELN, LIMS, ERP, SAP or other data management systems. The loop of data security, traceability and paperless Lab is made possible because the instruments that start the process of data acquisition like a Balance or a Titrator are then connected in true bi-directional data flow all the way through to the final data repository.

Methods are brought directly onto the instrument. The complete step-by-step user guidance ensures that the users follow the SOP of the lab. The user works entirely on the touchscreen of the instrument or from the computer and the data is automatically transferred to the database, to reports, and on to other systems without the need of manual transcription.

LabX powers the bench in that it handles multiple instruments with one common user interface and database and removes the need for manual transcription of data.

3 Purpose of this document

This document is intended to provide a structured overview of METTLER TOLEDO LabX software. It serves as a walkthrough guide to plan an upcoming installation as well as to identify and provide the optimal network infrastructure to run LabX smoothly.

IT technicians, managers as well as key users and employees involved in the project will find information about:

- preparation and planning of the installation
- the general layout of the software
- the implemented components
- dimensioning and scalability of the system
- typical and recommended installation

Installation team and skills

For installation and maintenance an experienced computer user is required. If LabX is operated in the distributed installation mode, an IT specialist for installation and maintenance who has knowledge of Microsoft networks configuration and Microsoft SQL Server is required.

Operators at instruments do not need additional knowledge of LabX. An operator who is trained in operating a stand-alone instrument is able to operate the same instrument that is connected to LabX.

Operators designing methods and reports need the following skills: Good knowledge of company internal processes and standard operating procedures as well as good general computer knowledge. Training by METTLER TOLEDO is highly recommended.

4 How to use the document

This document focuses on common criteria and questions when preparing an installation of LabX. However, it is essential that the intended installation has been chosen in advance. Within the following three overall sections you will be guided through:

Software

These sections provide information about the software in general.

- [Introduction ▸ Page 3]
- [Purpose of the software ▸ Page 4]
- [Purpose of this document ▸ Page 5]
- [How to use the document ▸ Page 6]
- [System specifications ▸ Page 7]
- [Software specifications ▸ Page 10]
- [System dimension and scalabilities ▸ Page 11]

The required components as well as the built-in frameworks are mentioned here. Impacts on the design and layout of your installation are addressed in section [System dimension and scalabilities ▸ Page 11].

Installation

Section [Typical installation / Preparing the installation ▸ Page 13] shows the most common installation types. Information about hardware with good performance, communication blueprint, ports and firewall settings, as well as infrastructure information can be found in this section. Please choose your installation type and go directly to the appropriate paragraph:

- [Single PC ▸ Page 13]
- [Distributed System ▸ Page 18]
- [Virtualized environement ▸ Page 27]

General information

General information and follow ups are provided in the following sections. Access to METTLER TOLEDO Services and Support and the appendix with a collection of additional information can be found here.

- [METTLER TOLEDO support ▸ Page 28]
- [Appendix ▸ Page 29]

All devices supported by LabX and the software versions are mentioned in the table [Compatibility matrix ▸ Page 30].

General instructions

The current document will be updated regularly. It can be found for download on the METTLER TOLEDO extranet in the corresponding product community. Please contact your METTLER TOLEDO representative for an updated version.

Where to find further information:

- The **Installation Instructions** manual enclosed enables you to quickly become familiar with the easy installation on a single computer or the more complex procedure on a distributed system. You will find an overview of the main working principles and the basic steps for setting up a system. In detailed topics you will learn how to use the software efficiently.
- The context-sensitive **Help** integrated in the software provides a complete description of all components and modules and a detailed description of all parameters.

  It can be accessed via the question mark in the upper right-hand corner of the appropriate title bar, or by using the F1 key from within LabX on the computer keyboard. A help button is also provided sometimes in dialog boxes.

See also

🔗 Compatibility matrix ▸ Page 30

5 System specifications

5.1 Available systems

LabX is a client/server system. Every attached computer and instrument is treated as a client to the server. The system can be distributed over multiple servers (both virtual and physical) or strictly on one local computer.

For the local system (Express edition) up to 3 instruments can be connected to one local computer. For the larger systems (Server edition), that can be either distributed or localized, up to 60 instruments can be connected to each server.

5.2 Licensing structure

LabX™ software comes conveniently on a USB flash drive, with all configurations and options handled via license keys. Choose your system based on a Starter Pack. In addition, LabX is licensed per connected instrument, therefore you only need a license per instrument and not for every computer. Further Option Licenses and Software Services are added based on your needs.

Step 1
Select a Starter Pack according to your first instrument and the number of instruments you want to connect.

Starter Pack LabX Express
Connect up to three instruments

- LabX Express
- Instrument License *

Starter Pack LabX Server
Connect up to 60 instruments

- LabX Server
- Instrument License *
- User Management
- Auto Import / Export

Step 2
Extend your systems with optional packages according to your needs.

Option Licenses

- User Management
- Auto Import / Export
- Regulation **
- Product Database
- Statistical Evaluation
- Report Designer
- System Integration
- STAReX Integration

Step 3
Add additional instrument licenses for all of your instruments.

Instrument Licenses

- Automatic Balance/Balance
- Titration
- UV/VIS
- SevenExcellence
- Density Refractometry
- Thermal Values
- Quantos

Step 4
Complete your system by choosing your software services.

Software Services

Software Care Standard	Always get the latest software release and remote support.
Software Care Comprehensive	Always get the latest software release and profit from remote support and on-site support.
On-Demand Services	Choose additional services you need to complete your system.

* Starter Pack Titration includes both, one instrument license for a titrator and one for a balance.

** Also includes the option User Management.

5.2.1 LabX™ Starter Packs

Express Edition

Full version of LabX for installation on a single computer. Up to 3 instruments can be connected to this edition.

Name		Description	Order no.
Automatic Balance/ Balance	1	Automatic Balance/Balance instrument license.	11153120
Density Refractometry	1	Density Refractometry instrument license.	11153130
Thermal Values	1	Thermal Values instrument license.	30005779
Quantos	1	Quantos instrument license.	30062403
Titration	1	Titration instrument license. 1 Automatic Balance/Balance instrument license.	30097754
UV/VIS	1	UV/VIS instrument license.	30247984
SevenExcellence	1	SevenExcellence instrument license.	30247987

Server Edition

Full version of LabX for installation on multiple computers and available in distributed network. Up to 60 instruments can be connected to this edition.

Name		Description	Order no.
Automatic Balance/ Balance	1	Automatic Balance/Balance instrument license. User Management option. Auto Import / Export option.	11153121
Density Refractometry	1	Density Refractometry instrument license. User Management option. Auto Import / Export option.	11153131
Thermal Values	1	Thermal Values instrument license. User Management option. Auto Import / Export option.	30005810
Quantos	1	Quantos instrument license. User Management option. Auto Import / Export option.	30062404
Titration	1	Titration instrument license. 1 Automatic Balance/Balance instrument license. User Management option. Auto Import / Export option.	30097755
UV/VIS	1	UV/VIS instrument license. User Management option. Auto Import / Export option.	30247985
SevenExcellence	1	SevenExcellence instrument license. User Management option. Auto Import / Export option.	30247988

5.2.2 Instrument licenses

For each additional instrument to be connected to the LabX system, an Instrument License is needed.

Name		Description	Order no.
Automatic Balance/ Balance	1	Automatic Balance/Balance instrument license.	11153220
Density Refractometry	1	Density Refractometry instrument license.	11153250
Thermal Values	1	Thermal Values instrument license.	30005811
Quantos	1	Quantos instrument license.	30062405
Titration	1	Titration instrument license.	30097756
UV/VIS	1	UV/VIS instrument license.	30247986
SevenExcellence	1	SevenExcellence instrument license.	30247989

5.2.3 Option licenses

The LabX installation is fully extendable. See the options and functionalities below that can be added to the installation.

Name	Description	Order no.
User Management	Centrally maintain and control users and roles within LabX.	11153102
Product Database [1)]	Manage product data within LabX centrally – run methods based on product data.	11153103
Auto Import / Export	Import and export data into and from CSV and XML formats.	11153105
Statistical Evaluation	Analyze measurements and monitor trends and process changes, taking into account applicable regulations.	30262374
Regulation	Full support of regulatory requirements, including 21 CFR Part 11. Also includes the option User Management.	11153104
Report Designer	Freely customize your reports with all details and possibilities including charts, graphics, and tables.	11153106
System Integration	Integrate LabX installation with other software packages including LIMS and ERPs using API webservice.	11153107
STAReX Integration	Use LabX and any connected balance to automatically transfer the weight into STARe software for thermal analysis.	30486416

1) Option not available for titration applications

5.2.4 LabX Express to Server Sidegrade

LabX Express systems can be expanded to LabX Server.

Name	Description	Order no.
LabX Express - Server	Sidegrade a LabX Express edition installation into a LabX Server edition.	11153117

5.3 Languages

The following languages are available for LabX on the computer and the instrument.

DERE = Density Refractometry I TV = Thermal Values I SE = SevenExcellence

Language	LabX	Balance	Quantos	Titration	DERE	TV	SE	UV/VIS
English	•	•	•	•	•	•	•	•
German	•	•	•	•	•	•	•	•
French	•	•	•	•	•	•	•	•
Italian	•	•	•	•	•	•	•	•
Spanish	•	•	•	•	•	•	•	•
Portuguese	•	•[1)]	•[1)]	•	•	•	•	•
Russian [2)]	•	•	•	•	•	•	•	•
Chinese	•	•	•	•	•	•	•	•
Japanese	•	•	•	•	-	•	•	•

1) If the language of the LabX installation is not available on the instrument, individual texts are displayed on the instrument in English.

2) With a Russian installation of LabX, Russian keyboards are displayed on the balances for text input. Since not all characters can be entered via these keyboards, this must be taken into account when entering user names and passwords on the PC.

6 Software specifications

- LabX is a client server system.
- Clients are implemented as Windows executables. They are **not** web-based and **do not** require a web browser.
- Server components are hosted in "Windows services" and are controlled by the "Windows Service Controller".

6.1 Client components

LabX PC Client

The client contains a graphical user interface to operate the system from a PC.

LabX DB Maintenance (Tool)

This application is required to manage (backup/restore/initialize/archiving) the LabX database.

LabX Installation Checker (Tool)

This application allows double-checking the system where LabX is installed on, its configuration and installed components.

6.2 Server components

Business Server (part of LabXHostService)

A Business Server is the entry point for clients and is therefore the point of authentication to any client that wants to interact with the LabX system. The Business Server is the only component that accesses the database. The business service provides the core functionality of the system.

Instrument Server (part of LabXHostService)

An Instrument Server is responsible to connect instruments to the LabX system.

6.3 Third party components

Database

The database stores all data of the LabX sytem in a reliable way and provides fast access to it. The SQL Server Express Edition can be installed by the LabX installer. The option to access any SQL Server database that is installed and maintained by the customer is also provided.

The database collation for LabX has to be "SQL_Latin1_General_CP1_CI_AS". The isolation level "snapshot" has to be enabled.

6.4 Other 3rd-Party components

The following third party software is required by LabX Version 13.1 to run. The LabX installation will install the necessary components.

Software

Name	Version	Installed by LabX
Adobe Acrobat Reader [1)]	10 or newer	required but not installed
.Net Framework [2)]	4.8	yes

1) ▸ https://get.adobe.com/reader

2) ▸ https://www.microsoft.com/net/download > .NET Framework 4.8

Internet browsers

To view the LabX E-Learning tutorial videos you require one of the following internet browsers.

Name	Version
Microsoft Edge	44 and newer
Google Chrome	80 and newer
Mozilla Firefox	82 and newer

7 System dimension and scalabilities

Dimensioning the system

LabX is by design a highly reliable and scalable system. It can be run on a single PC hardware or in distributed environments with multiple servers. This chapter will support you by identifying and choosing the installation type which best fits your requirements.

Comparing to the general requirements in the previous chapter, installing the LabX system in a distributed mode requires some additional effort. The following diagram shows how the system should be set up in the distributed mode.

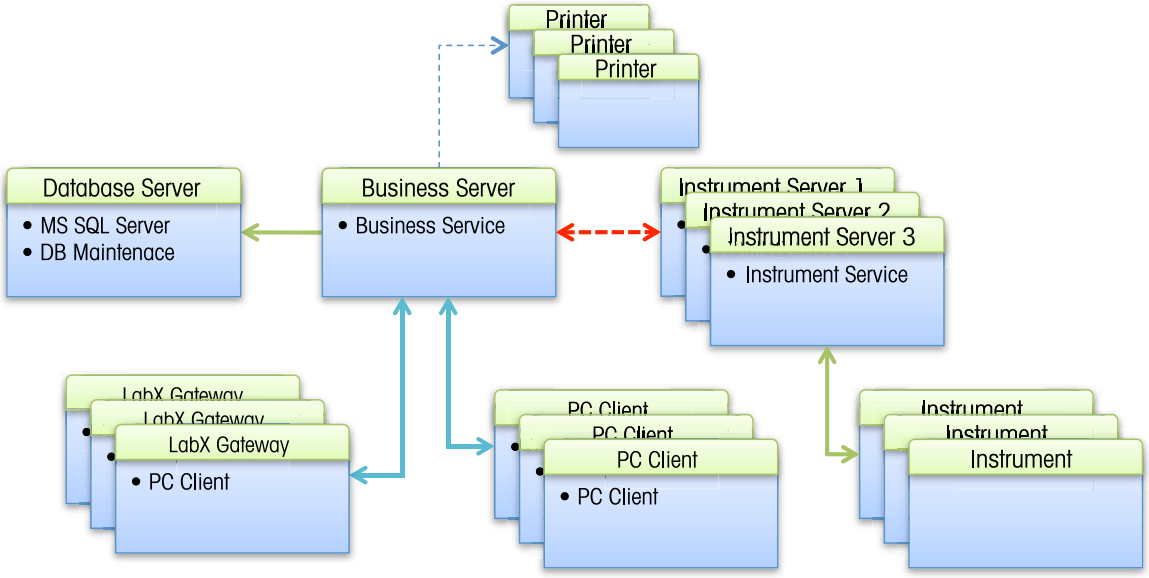

Running LabX in the distributed mode requires two high end servers, one for the database and one for the Business Server. Additional standard servers for connecting instruments can be used as instrument servers. As PC clients, standard computers can be used.

It is essential to choose the right environment to run LabX. Please answer the check question in the table below and find straight away the recommended solution:

LabX setup

All values are recommendations based upon best practices and experience.

No.	Check Question	Answer	Single PC	Distributed system
1	Number of instruments per LabX system		1…2 per cpu core	≥3 (system scales by number of instrument servers)
2	Maximum number of instruments per instrument server		1…2 per cpu core	System scaling dependent on hardware resources
3	Connected devices via RS232		Multiple	Multiple
4	Connected devices via USB		Multiple	Multiple
5	Connected devices via Ethernet		Multiple IP v4	Multiple IP v4
6	Number of T90/T9 Titrators running two tasks in parallel per LabX system		1…2	≥2 (system scaling by number of instrument servers)

Database selection and dimensioning

All values are recommendations based upon best practices and experience.

No.	Check Question		SQL Server Express	SQL Server Standard/ Enterprise
1	Distributed System		Yes	Yes
2	Number of instruments to be connected		2...3	≥3
3	Archiving		LabX DB Maintenance	LabX DB Maintenance
4	Archiving interval		6 to 12 month depending on workload	not required
5	DB Backup/Restore		LabX DB Maintenance	Professional Backup tool or LabX DB Maintenance[1)]
6	Thermal Value and Density instrument videos[2)]		≤ 150	> 150

1) It is recommended to use LabX DB Maintenance to restore backups that were created with an older version of LabX.

2) The max. number of stored videos can be limited over a Thermal Value and Density instrument specific settings in LabX.

8 Typical installation / Preparing the installation

8.1 Single PC

8.1.1 Introduction

On a single PC deployment, all LabX components are installed on a single workstation. This scenario is applicable for small installations with low data volume.

8.1.2 System requirements

The following table contains the hardware requirements for operating a single PC installation of a LabX Version 13.1 system.

Single PC (For 2-3 instruments)

Components	Requirements
Minimum CPU mark *	> 3700
Number of CPU cores (physical or virtual)	4
RAM	8 GB
Display Resolution	1920 x 1080
Storage (SSD)	30 GB free space
Network	1 Gbit/s Ethernet
Operating system	Windows 11
USB port	For installation

* Evaluation based on "CPU Benchmarks".

https://www.cpubenchmark.net

See also

CPU benchmarks ▸ Page 37

8.1.3 Supported operating systems

The following list shows the supported operating systems of LabX Version 13.1. To operate LabX we recommend using Windows 11 as client operating system.

Operating systems

Name	Service pack / Version	Editions	32 bit	64 bit
Windows 10	V22H2	Pro, Enterprise		•
Windows 10 LTSC	V2021	Long Term Servicing Channel (LTSC)		•
Windows 11	V22H2/V23H2	Pro, Enterprise		•
Windows Server 2022	-	Standard, Datacenter		•

8.1.4 Supported SQL servers

The following list shows an overview over the supported Microsoft SQL Server Editions. During the installation of LabX Version 13.1, the setup offers to install a Microsoft SQL Server 2019 Express Edition. You can install LabX on a Microsoft SQL Server 2019 to avoid size limitations and other performance restrictions.

SQL Servers

Name	Service Pack	Editions
SQL Server 2017	CU31	Express and Standard/Enterprise
SQL Server 2019	CU22	Express and Standard/Enterprise
SQL Server 2022	CU7	Express and Standard/Enterprise

Database maintenance

Make sure that the database is backed up at a desired frequency, depending on your disaster recovery strategy. Update the statistics and reorganize the fragmented indexes at regular intervals (for example, once a day / once a week). Use the command line option in LabX DB Maintenance, which performs index optimizations and statistics updates.

Recommendation

- Run the SQL server in "Windows Authentication mode", instead of "Mixed mode".
- Only grant access to the LabX DB for the LabX Service Account under which the LabXHostService is running. Avoid assigning the "sysadmin role" to that login. Also avoid that computers (and accounts) running only LabX clients have direct access to the LabX database.
- Disable all potential script / code executing functionality like "xp_cmdshell" or CLR functionality on that instance of the SQL server.

8.1.5 Additional software

Fingerprint reader

Fingerprint readers can be used for authentication as an alternative to password entry. In contrast to a conventional login with a user name and password, the user simply places a finger on the fingerprint reader. If the fingerprint is recognized, the user is authenticated in the same way as entering a user name and password. Fingerprint readers can be used for the following actions.

- Logging on to LabX
- Releasing a screen lock
- Signing various objects

USB drivers

- For connecting any of the compatible instruments to the system, a specific USB driver must be installed on the corresponding PCs. Install the USB driver (can be found on the LabX USB flash drive) using an administrator account.

8.1.6 Connected instruments

LabX Version 13.1 supports the following instruments with the corresponding configuration. The instruments have to fulfill the requirements to operate with LabX.

Balance

Model	Terminal	Bridge	USB	Serial	Network
XP / XS Precision	5.00 / 5.10 / 5.20 / 5.30 / 5.40 / 5.50 / 5.61	4.24 / 4.25 / 4.30 / 4.40 / 4.41 / 4.42		•	•
XP / XS Analytical	5.00 / 5.10 / 5.20 / 5.30 / 5.40 / 5.50 / 5.61	4.24 / 4.25 / 4.30 / 4.40 / 4.41 / 4.42		•	•
XP / XS Micro	5.00 / 5.10 / 5.20 / 5.30 / 5.40 / 5.50 / 5.61	1.00 / 1.10 / 1.20		•	•
XPE / XSE Precision	1.10 / 2.00 / 2.01 / 2.11 / 2.20 / 2.21 / 2.22 / 2.23	1.00 / 1.10		•	•
XPE / XSE Analytical	1.10 / 2.00 / 2.01 / 2.11 / 2.20 / 2.21 / 2.22 / 2.23	1.10		•	•
XPR / XSR Micro	2.0.302 / 2.0.303 / 2.0.401 / 2.0.501 / 2.0.502 / 2.0.503	2.0.302 / 2.0.401 / 2.0.501	•		•
XPR / XSR Precision	2.0.302 / 2.0.303 / 2.0.401 / 2.0.501 / 2.0.502 / 2.0.503	1.0.302 / 1.0.401 / 1.0.501	•		•
XPR / XSR Analytical	2.0.302 / 2.0.303 / 2.0.401 / 2.0.501 / 2.0.502 / 2.0.503	1.0.302 / 1.0.303 / 1.0.401 / 1.0.501	•		•

Quantos

Model	Terminal	Bridge	USB	Serial	Network
XPE Analytical	2.00 / 2.01 / 2.11 / 2.20 / 2.21 / 2.22 / 2.23	1.10			•

Titration Excellence

Model	Firmware	USB	Serial	Network
G20 *	2.0.1 / 2.0.2 / 2.0.3	•		•
V20 / V30	3.0.1 / 3.0.2 / 3.0.3	•		•
C20 / C30	3.0.1 / 3.0.2 / 3.0.3	•		•
T50 / T70 / T90	4.0.1 / 4.0.2 / 4.0.3	•		•

Model	Firmware	USB	Serial	Network
G20 S *	5.4.0 / 5.4.1 / 5.5.0	•		•
V20 S / V30 S	5.4.0 / 5.4.1 / 5.5.0	•		•
C20 S / C30 S	5.4.0 / 5.4.1 / 5.5.0	•		•
T5 / T7 / T9	5.4.0 / 5.4.1 / 5.5.0	•		•

* Compact Titration G20 / G20 S only with LabX Express Edition and not in combination with the option Regulation.

Density Refractometry

Model	Firmware	USB	Serial	Network
DM40 / DM45 / DM50 / DX40 / DX45 / DX50	2.6.0 / 2.6.1 / 2.6.2	•		•
RM40 / RM50 / RX40 / RX50	2.6.0 / 2.6.1 / 2.6.2	•		•
D4 / D5 / D6	2.0.1	•		•
R4 / R5 / RX4 / RX5	2.0.1	•		•

Thermal Value Excellence

Model	Firmware	USB	Serial	Network
MP70 / MP80 / MP90	2.10 / 2.11 / 3.00 / 3.01 / 4.00 / 4.01			•

SevenExcellence

Model	Firmware	USB	Serial	Network
SevenExcellence	4.3.1 / 4.3.2 / 4.3.3	•		•

UV/VIS Excellence

Model	Firmware	USB	Serial	Network
UV7 / UV5 / UV5Bio / UV5Nano	3.0.0 / 3.0.1 / 3.0.2 / 3.0.3 / 3.0.4 / 3.0.5	•		•

8.1.7 Network and firewalls

Firewall settings are set and unset in the current Firewall Profile.

A connection with a latency (RTT) of less than 50 ms is required.

	Port (Defaults)	Purpose
SQL Server		
Sqlbrowser.exe		Process which belongs to the Microsoft SQL Server and provides browsing services.
Sqlserv.exe		Main executable relating to Microsoft's SQL Server Suite. This server application provides SQL server services.
Applications		
LabXHost.exe		Incorporates the LabXHostService which hosts an instrument server and a business server component.
LabXPcClient.exe		The LabX UI application.
LabXDBMaintenance.exe		DB Backup/Restore Utility.
Default Ports TCP protocol		
Instrument Server	51154	Responsible for instrument communication and workflow execution.
Integration Service	51155	Part of the application programming interface (API).
Integration Meta Service	51156	Part of the application programming interface (API).
Business Server	51153	The LabX business logic.
Doorbell Service	51152	Handles the component communication within the LabX system.

For connecting instruments using a computer network to the LabX system, all firewalls need to be configured correctly. The firewall configuration on the computer side is performed by the LabX installation. The configuration on routers and firewalls have to be done manually.
The following list shows the instruments that can be connected by what transport mechanism. Listed are the TCP/IP ports that are needed by the Network and USB connections.

Model	Instrument Port *	USB	Serial	Network
XP/XS Excellence Balance	8014		•	•
XPE/XSE Excellence Balance	8014		•	•
XPR/XSR Excellence Balance	8014	•		•
Quantos Balance XPE	8014			•

Model	Instrument Port *	USB	Serial	Network
Thermal Value Excellence	8014			•
LiquiPhysics™ Excellence	8014	•		•
Density Excellence	8014	•		•
Refractometry Excellence	8014	•		•
Titration Excellence	8014	•		•
Compact Titration	8014	•		•
SevenExcellence	8014	•		•
UV/VIS Excellence	8014	•		•

* Default port on the instrument side, the instrument port can be changed anytime on the instruments.

Power saving plans

It is recommended to disable power saving plans for network components that put individual ports or network adapters into energy saving/sleep mode. This prevents instruments from being disconnected.

Internet and cloud

- It is recommended to not expose any of the LabXHostService (Business Server, Instrument Server, instruments) directly to the internet, by enabling port forwarding or similar technologies.
- Prefer locally running databases over hosted cloud solutions. It is possible to use a cloud-based database, but is not recommended.

8.1.8 Security and backup

The installer of the LabX system requires administrator privileges on all LabX computers and on the database system. For creating a backup or maintaining the LabX database, administrator or DB owner privileges are required as well. Standard PC client users or users on instruments do not require any additional rights.

A backup system should be available, which supports a periodical backup of the SQL database. If no such tool is available, the built in LabX DB Maintenance tool can be used to perform a backup, but using a professional backup tool is also recommended.

Note

- It is recommended to use LabX DB Maintenance to restore backups that were created with an older version of LabX.

8.1.9 Checklist single PC

Single PC

No.	Description	Criterion	Pass	N/A
System requirements				
1	Minimum CPU mark *	> 3700	☐	☐
2	Number of CPU cores (physical or virtual)	4	☐	☐
3	RAM	8 GB	☐	☐
4	Display Resolution	1920 x 1080	☐	☐
5	Storage (SSD)	30 GB free space	☐	☐
6	Network	1 Gbit/s Ethernet	☐	☐
7	USB port	For installation	☐	☐
Operating systems				
8	Windows 10	V22H2	☐	☐
9	Windows 10 LTSC	V2021	☐	☐
10	Windows 11	V22H2/V23H2	☐	☐
11	Windows Server 2022	-	☐	☐
Database Mangement Server System (DBMS)				
12	SQL Server 2017	CU31	☐	☐
13	SQL Server 2019	CU22	☐	☐
14	SQL Server 2022	CU7	☐	☐
DB backup				
15	LabX DB Maintenance		☐	☐

* Evaluation based on "CPU Benchmarks".

https://www.cpubenchmark.net

See also

CPU benchmarks ▸ Page 37

8.2 Distributed System

8.2.1 Introduction

With the increasing size of the system, it is advisable for performance reasons to install certain components on separate computers. For example, the Business Server and the database server can be installed on a dedicated computer.

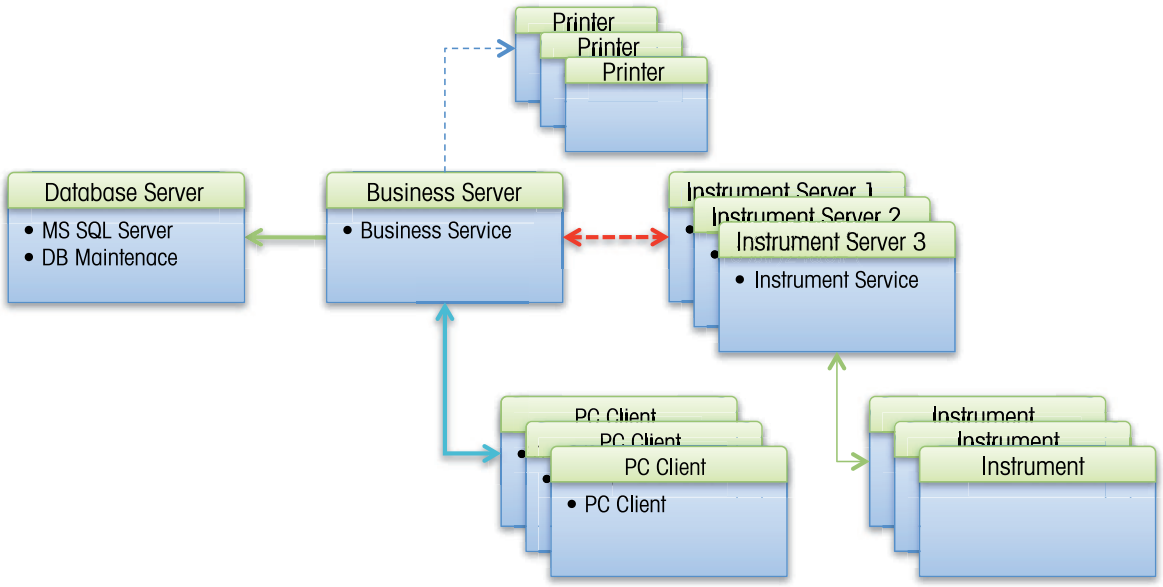

8.2.2 Additional software

Fingerprint reader

Fingerprint readers can be used for authentication as an alternative to password entry. In contrast to a conventional login with a user name and password, the user simply places a finger on the fingerprint reader. If the fingerprint is recognized, the user is authenticated in the same way as entering a user name and password. Fingerprint readers can be used for the following actions.

- Logging on to LabX
- Releasing a screen lock
- Signing various objects

USB drivers

- For connecting any of the compatible instruments to the system, a specific USB driver must be installed on the corresponding PCs. Install the USB driver (can be found on the LabX USB flash drive) using an administrator account.

8.2.3 Connected instruments

LabX Version 13.1 supports the following instruments with the corresponding configuration. The instruments have to fulfill the requirements to operate with LabX.

Balance

Model	Terminal	Bridge	USB	Serial	Network
XP / XS Precision	5.00 / 5.10 / 5.20 / 5.30 / 5.40 / 5.50 / 5.61	4.24 / 4.25 / 4.30 / 4.40 / 4.41 / 4.42		•	•
XP / XS Analytical	5.00 / 5.10 / 5.20 / 5.30 / 5.40 / 5.50 / 5.61	4.24 / 4.25 / 4.30 / 4.40 / 4.41 / 4.42		•	•
XP / XS Micro	5.00 / 5.10 / 5.20 / 5.30 / 5.40 / 5.50 / 5.61	1.00 / 1.10 / 1.20		•	•
XPE / XSE Precision	1.10 / 2.00 / 2.01 / 2.11 / 2.20 / 2.21 / 2.22 / 2.23	1.00 / 1.10		•	•
XPE / XSE Analytical	1.10 / 2.00 / 2.01 / 2.11 / 2.20 / 2.21 / 2.22 / 2.23	1.10		•	•

Model	Terminal	Bridge	USB	Serial	Network
XPR / XSR Micro	2.0.302 / 2.0.303 / 2.0.401 / 2.0.501 / 2.0.502 / 2.0.503	2.0.302 / 2.0.401 / 2.0.501	•		•
XPR / XSR Precision	2.0.302 / 2.0.303 / 2.0.401 / 2.0.501 / 2.0.502 / 2.0.503	1.0.302 / 1.0.401 / 1.0.501	•		•
XPR / XSR Analytical	2.0.302 / 2.0.303 / 2.0.401 / 2.0.501 / 2.0.502 / 2.0.503	1.0.302 / 1.0.303 / 1.0.401 / 1.0.501	•		•

Quantos

Model	Terminal	Bridge	USB	Serial	Network
XPE Analytical	2.00 / 2.01 / 2.11 / 2.20 / 2.21 / 2.22 / 2.23	1.10			•

Titration Excellence

Model	Firmware	USB	Serial	Network
G20 *	2.0.1 / 2.0.2 / 2.0.3	•		•
V20 / V30	3.0.1 / 3.0.2 / 3.0.3	•		•
C20 / C30	3.0.1 / 3.0.2 / 3.0.3	•		•
T50 / T70 / T90	4.0.1 / 4.0.2 / 4.0.3	•		•
G20 S *	5.4.0 / 5.4.1 / 5.5.0	•		•
V20 S / V30 S	5.4.0 / 5.4.1 / 5.5.0	•		•
C20 S / C30 S	5.4.0 / 5.4.1 / 5.5.0	•		•
T5 / T7 / T9	5.4.0 / 5.4.1 / 5.5.0	•		•

* Compact Titration G20 / G20 S only with LabX Express Edition and not in combination with the option Regulation.

Density Refractometry

Model	Firmware	USB	Serial	Network
DM40 / DM45 / DM50 / DX40 / DX45 / DX50	2.6.0 / 2.6.1 / 2.6.2	•		•
RM40 / RM50 / RX40 / RX50	2.6.0 / 2.6.1 / 2.6.2	•		•
D4 / D5 / D6	2.0.1	•		•
R4 / R5 / RX4 / RX5	2.0.1	•		•

Thermal Value Excellence

Model	Firmware	USB	Serial	Network
MP70 / MP80 / MP90	2.10 / 2.11 / 3.00 / 3.01 / 4.00 / 4.01			•

SevenExcellence

Model	Firmware	USB	Serial	Network
SevenExcellence	4.3.1 / 4.3.2 / 4.3.3	•		•

UV/VIS Excellence

Model	Firmware	USB	Serial	Network
UV7 / UV5 / UV5Bio / UV5Nano	3.0.0 / 3.0.1 / 3.0.2 / 3.0.3 / 3.0.4 / 3.0.5	•		•

8.2.4 Network and firewalls

Firewall settings are set and unset in the current Firewall Profile.

A connection with a latency (RTT) of less than 50 ms is required.

	Port (Defaults)	Purpose
SQL Server		
Sqlbrowser.exe		Process which belongs to the Microsoft SQL Server and provides browsing services.
Sqlserv.exe		Main executable relating to Microsoft's SQL Server Suite. This server application provides SQL server services.
Applications		
LabXHost.exe		Incorporates the LabXHostService which hosts an instrument server and a business server component.

	Port (Defaults)	Purpose
LabXPcClient.exe		The LabX UI application.
LabXDBMaintenance.exe		DB Backup/Restore Utility.
Default Ports TCP protocol		
Instrument Server	51154	Responsible for instrument communication and workflow execution.
Integration Service	51155	Part of the application programming interface (API).
Integration Meta Service	51156	Part of the application programming interface (API).
Business Server	51153	The LabX business logic.
Doorbell Service	51152	Handles the component communication within the LabX system.

For connecting instruments using a computer network to the LabX system, all firewalls need to be configured correctly. The firewall configuration on the computer side is performed by the LabX installation. The configuration on routers and firewalls have to be done manually.
The following list shows the instruments that can be connected by what transport mechanism. Listed are the TCP/IP ports that are needed by the Network and USB connections.

Model	Instrument Port *	USB	Serial	Network
XP/XS Excellence Balance	8014		•	•
XPE/XSE Excellence Balance	8014		•	•
XPR/XSR Excellence Balance	8014	•		•
Quantos Balance XPE	8014			•
Thermal Value Excellence	8014			•
LiquiPhysics™ Excellence	8014	•		•
Density Excellence	8014	•		•
Refractometry Excellence	8014	•		•
Titration Excellence	8014	•		•
Compact Titration	8014	•		•
SevenExcellence	8014	•		•
UV/VIS Excellence	8014	•		•

* Default port on the instrument side, the instrument port can be changed anytime on the instruments.

Network separation

Isolate traffic into separate VLANs whenever possible.

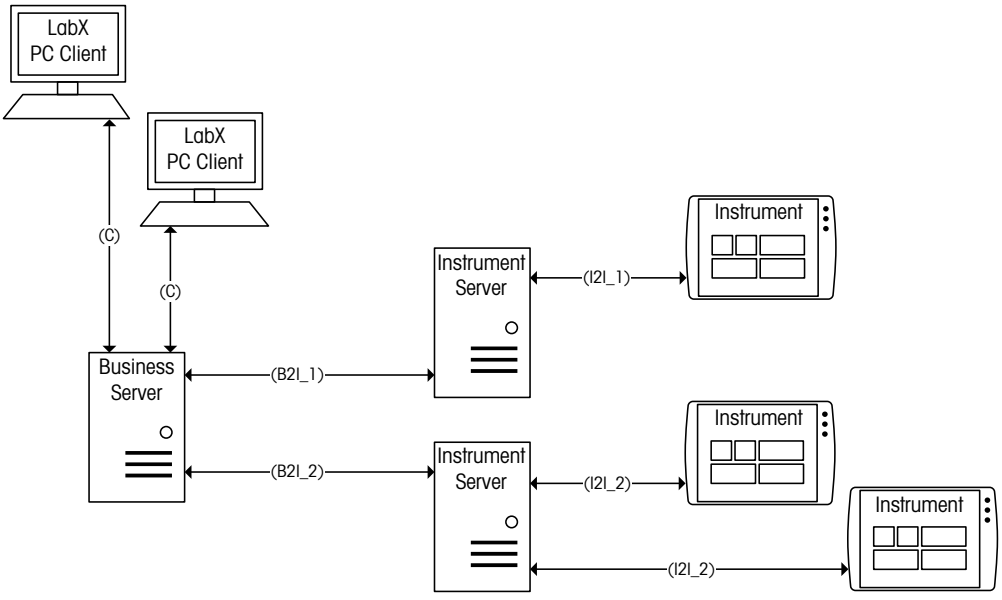

Dedicated VLANs can be used for communication between components. It is recommended to separate at least the data traffic between clients and Instrument Server / instruments.

- Clients and Business Server (C)
- Business Server and Instrument Server (B2I_1)
- Business Server and Instrument Server (B2I_2)
- Instrument Server and Instrument (I2I_1)
- Instrument Server and Instruments (I2I_2)

VPN / Layer 1 / Layer 2 / Layer 3 Trunks

The system is designed to operate with an always available connection without interruptions. Avoid service separation over long distances for the listed scenarios.

- Client to Business Server.
- Business Server to Instrument Server.
- Instrument Server to instrument.

DNS lookup

Make sure that all specified host names (for example the Business Server) can be resolved without specifying FQDN (Fully-Qualified Host Name). If this is not possible or required, make sure that Instrument Server and LabX PC Client specify the Business Server with the FQDN instead of the computer name only in its configuration file.

Power saving plans

It is recommended to disable power saving plans for network components that put individual ports or network adapters into energy saving/sleep mode. This prevents instruments from being disconnected.

Internet and cloud

- It is recommended to not expose any of the LabXHostService (Business Server, Instrument Server, instruments) directly to the internet, by enabling port forwarding or similar technologies.
- Prefer locally running databases over hosted cloud solutions. It is possible to use a cloud-based database, but is not recommended.

Configure reliable TCP sessions

In distributed LabX systems with Layer 3 routing between the business and instrument servers, new TCP connections are regularly established between these two parts of the system. These connections are kept open by LabX for as long as possible, even if they are no longer used (no traffic). Keeping connections open for an extended period of time may not be accepted by IT policies, and firewall settings may block such connections. Over time, this leads to an increasing number of TCP connections, resulting in drastically reduced business server response time and instrument connection losses.

Typically, this problem occurs in large distributed installations with many connected instruments that run for a long period of time (no restart of the business server).

A solution is described in this knowledge base article KB 100300.

▶ https://activation.mt.com/kb/Pages/KB100300.aspx

Note

- It is strongly recommended to revalidate the system after the changes have been applied to the TCP configuration.

8.2.5 Security and backup

The installer of the LabX system requires administrator privileges on all LabX computers and on the database system. For creating a backup or maintaining the LabX database, administrator or DB owner privileges are required as well. Standard PC client users or users on instruments do not require any additional rights.

A backup system should be available, which supports a periodical backup of the SQL database. If no such tool is available, the built in LabX DB Maintenance tool of LabX can be used to perform a backup, but using a professional backup tool is highly recommended.

Note

- It is recommended to use LabX DB Maintenance to restore backups that were created with an older version of LabX.

8.2.6 Windows Time Service

LabX requires an infrastructure which ensures that the time on all components is correct. Ensure that the Windows Time Service are configured correctly for all involved components.

▶ https://docs.microsoft.com/en-us/windows-server/networking/windows-time-service/how-the-windows-time-service-works

LabX can be installed and operated in any time zone of your choice. However, all components of a LabX system (Database, Business Server, Instrument Servers, DB Maintenance, and Clients) must be located in the same time zone.

All times are stored in UTC time in the LabX database, but are displayed in the clients, on reports and exports as local times of the LabX system without specifying the time zone. In the audit trail, the UTC time is displayed for all entries in addition to the local time.

LabX supports the change of your local time due to daylight saving time in your time zone. This time change does not affect the times displayed in your data.

8.2.7 Client

8.2.7.1 System requirements

The following table contains the hardware requirements for operating a client of a LabX Version 13.1 system.

PC Client

Components	Requirements
Minimum CPU mark *	> 3200
Number of CPU cores (physical or virtual)	4
RAM	8 GB
Display Resolution	1920 x 1080
Storage (SSD)	10 GB free space
Network	1 Gbit/s Ethernet
Operating system	Windows 11
Installed LabX Components	PC Client

* Evaluation based on "CPU Benchmarks".

https://www.cpubenchmark.net

See also

CPU benchmarks ▸ Page 37

8.2.7.2 Operating systems

The following list shows the supported operating systems of LabX Version 13.1. To operate LabX we recommend using Windows 11 as client operating system.

Operating systems

Name	Service pack / Version	Editions	32 bit	64 bit
Windows 10	V22H2	Pro, Enterprise		•
Windows 10 LTSC	V2021	Long Term Servicing Channel (LTSC)		•
Windows 11	V22H2/V23H2	Pro, Enterprise		•
Windows Server 2022	-	Standard, Datacenter		•

8.2.7.3 Checklist

Client PC

No.	Description	Criterion	Pass	N/A
System requirements				
1	Minimum CPU mark *	> 3200	☐	☐
2	Number of CPU cores (physical or virtual)	4	☐	☐
3	RAM	8 GB	☐	☐
4	Display Resolution	1920 x 1080	☐	☐
5	Storage (SSD)	10 GB free space	☐	☐
6	Network	1 Gbit/s Ethernet	☐	☐
7	USB port	For installation	☐	☐
Operating systems				
8	Windows 10	V22H2	☐	☐
9	Windows 10 LTSC	V2021	☐	☐
10	Windows 11	V22H2/V23H2	☐	☐
11	Windows Server 2022	-	☐	☐

* Evaluation based on "CPU Benchmarks".

https://www.cpubenchmark.net

See also

CPU benchmarks ▸ Page 37

8.2.8 Server

8.2.8.1 System requirements

The following tables contain the hardware requirements for operating a LabX system in the distributed mode. However, the hardware requirements depend heavily on the number of connected instruments, type of instruments and the operating rate of the instruments.

If you have multiple server components from LabX on one computer, you need to add up the required capacities accordingly (Minimum CPU mark, Number of CPU cores, RAM and SSD storage space).

Business Server

Components	Requirements
Minimum CPU mark *	> 4700
Number of CPU cores (physical or virtual)	5 instruments or active users per core
RAM	32 GB (8 GB + 4 GB per 5 instruments or active users)
Display Resolution	1280 × 800
Storage (SSD)	10 GB free space
Network	1 Gbit/s Ethernet
Operating System	Windows Server 2022
Installed LabX Components	Business Server (runs under LabX Service Account).

* Evaluation based on "CPU Benchmarks".

https://www.cpubenchmark.net

Instrument Server

Components	Requirements
Minimum CPU mark *	> 3600
Number of CPU cores (physical or virtual)	2 running tasks or 2 instruments per core
RAM	16 GB (8 GB + 2 GB per 5 instruments or active users)
Display Resolution	1280 x 800
Storage (SSD)	10 GB free space
Network	1 Gbit/s Ethernet
Operating System	Windows Server 2022
Installed LabX Components	Instrument Service (runs under LabX Service Account).

* Evaluation based on "CPU Benchmarks".

https://www.cpubenchmark.net

Database Server

Components	Requirements
Minimum CPU mark *	> 4700
Number of CPU cores (physical or virtual)	4
RAM	32 GB (8 GB + 4 GB per 5 instruments or active users)
Display Resolution	1280 × 800
Storage (SSD)	100 GB free space
Network	1 Gbit/s Ethernet
Operating System	Windows Server 2022
SQL Server	MS SQL Server 2019 CU22

* Evaluation based on "CPU Benchmarks".

https://www.cpubenchmark.net

See also

CPU benchmarks ▸ Page 37

8.2.8.2 Supported operating systems

The following list shows the supported operating systems of LabX Version 13.1. To operate LabX we recommend using Windows Server 2022 as server operating system.

Operating systems

Name	Service pack / Version	Editions	32 bit	64 bit
Windows 10	V22H2	Pro, Enterprise		•
Windows 10 LTSC	V2021	Long Term Servicing Channel (LTSC)		•
Windows 11	V22H2/V23H2	Pro, Enterprise		•
Windows Server 2022	-	Standard, Datacenter		•

8.2.8.3 Supported SQL servers

The following list shows an overview over the supported Microsoft SQL Server Editions. During the installation of LabX Version 13.1, the setup offers to install a Microsoft SQL Server 2019 Express Edition. You can install LabX on a Microsoft SQL Server 2019 to avoid size limitations and other performance restrictions.

SQL Servers

Name	Service Pack	Editions
SQL Server 2017	CU31	Express and Standard/Enterprise
SQL Server 2019	CU22	Express and Standard/Enterprise
SQL Server 2022	CU7	Express and Standard/Enterprise

Database maintenance

Make sure that the database is backed up at a desired frequency, depending on your disaster recovery strategy. Update the statistics and reorganize the fragmented indexes at regular intervals (for example, once a day / once a week). Use the command line option in LabX DB Maintenance, which performs index optimizations and statistics updates.

Recommendation

- Run the SQL server in "Windows Authentication mode", instead of "Mixed mode".
- Only grant access to the LabX DB for the LabX Service Account under which the LabXHostService is running. Avoid assigning the "sysadmin role" to that login. Also avoid that computers (and accounts) running only LabX clients have direct access to the LabX database.
- Disable all potential script / code executing functionality like "xp_cmdshell" or CLR functionality on that instance of the SQL server.

8.2.8.4 Checklist

If you have multiple server components from LabX on one computer, you need to add up the required capacities accordingly (Minimum CPU mark, Number of CPU cores, RAM and SSD storage space).

Server PC

No.	Description	Criterion	Pass	N/A
System requirements				
1	Minimum CPU mark *		☐	☐
2	Number of CPU cores (physical or virtual)		☐	☐
3	RAM		☐	☐
4	Display Resolution	1280 × 800	☐	☐
5	Storage (SSD)	100 GB	☐	☐
6	Network	1 Gbit/s Ethernet	☐	☐
7	USB port	For installation	☐	☐
Operating systems				
8	Windows 10	V22H2	☐	☐
9	Windows 10 LTSC	V2021	☐	☐
10	Windows 11	V22H2/V23H2	☐	☐
11	Windows Server 2022	-	☐	☐
Database Mangement Server System (DBMS)				
12	SQL Server 2017	CU31	☐	☐
13	SQL Server 2019	CU22	☐	☐
14	SQL Server 2022	CU7	☐	☐
DB backup				
15	LabX DB Maintenance		☐	☐

* Evaluation based on "CPU Benchmarks".

https://www.cpubenchmark.net

See also

CPU benchmarks ▸ Page 37

8.3 Virtualized environement

Running LabX in a virtual machine (VM) requires specialized skills to set up and manage the virtualized environment. In particular, the performance of LabX can be affected by the activity of other VMs running on the same infrastructure, as well as how you configure the LabX VM itself.

Recommendations

The following recommendations come from our experience in running and testing LabX in virtualized environments.

- Know your platform. Consult the documentation for your operating system and your chosen virtualization technology, for details on setting up a reliable VM (virtual machine) image.
- Allocate enough memory. Ensure that your VM images have enough physical memory allocated to run LabX without swapping.
- Handle high I/O. Under normal usage, LabX requires a significant number of input/output (I/O) operations to the database and for each request. Ensure that you use the correct drivers and consider how you make storage available to your VMs to optimize this access.
- Handle peak CPU and memory usage. For certain operations LabX requires a significant amount of CPU and memory. Ensure that your virtualization infrastructure has the flexibility and capacity to deal with peak load, not just idle load.
- Synchronize time correctly. Some customers have had problems with time synchronization between the VM and the host system. This causes problems in LabX due to irregularities in the execution of scheduled tasks. We strongly recommend checking your VM time sync if you have issues with scheduled tasks in a virtualized environment.

See also

Windows Time Service ▸ Page 21

9 METTLER TOLEDO support

METTLER TOLEDO Service knows exactly on what the fulfilment of your specific company's demands depend. Profit from the market leader's experience and guarantee by us the best possible availability, achievement and conformance of your instruments and equipment.

METTLER TOLEDO Service recommends you to consider the following key elements before finalizing a services program:

- You need your equipment to be up and running all the time.
- You want to maintain the accuracy and functionality of your equipment, regardless of circumstances and usage, for many years of dependable operations.
- You want optimal instrument configuration for your environment and applications that save you time and money.
- You are concerned with staying compliant to your quality requirements, applicable laws and regulations and you need to pass any audit flawlessly.
- Your operators and technical staff need to be safe and productive. They need to know how to operate and maintain your instruments.

Please find your country and the corresponding Service & Support here:

▶ http://www.mt.com/contact

10 Appendix

10.1 Compatibility matrix

Not all of the driver versions that are compatible with a certain version of LabX are delivered with the installer. To get specific instrument driver versions contact you local METTLER TOLEDO support.

Balances

Type / LabX version	2012 FR2	2013	2014	2014 FR2	2016	2017	2018	2019	V 11	V 11.1	V 12	V 12.1	V 13	V 13.1
XP / XS	5.00 5.10 5.20	5.00 5.10 5.20	5.00 5.10 5.20 5.30	5.00 5.10 5.20 5.30 5.40	5.00 5.10 5.20 5.30 5.40	5.00 5.10 5.20 5.30 5.40 5.50	5.00 5.10 5.20 5.30 5.40 5.50 5.61	5.00 5.10 5.20 5.30 5.40 5.50 5.61	5.00 5.10 5.20 5.30 5.40 5.50 5.61	5.00 5.10 5.20 5.30 5.40 5.50 5.61	5.00 5.10 5.20 5.30 5.40 5.50 5.61	5.00 5.10 5.20 5.30 5.40 5.50 5.61	5.00 5.10 5.20 5.30 5.40 5.50 5.61	5.00 5.10 5.20 5.30 5.40 5.50 5.61
XPE / XSE			1.02	1.10	1.10 2.00 2.01	1.10 2.00 2.01 2.11 2.20	1.10 2.00 2.01 2.11 2.20 2.21	1.10 2.00 2.01 2.11 2.20 2.21 2.22 2.23	1.10 2.00 2.01 2.11 2.20 2.21 2.22 2.23	1.10 2.00 2.01 2.11 2.20 2.21 2.22 2.23	1.10 2.00 2.01 2.11 2.20 2.21 2.22 2.23	1.10 2.00 2.01 2.11 2.20 2.21 2.22 2.23	1.10 2.00 2.01 2.11 2.20 2.21 2.22 2.23	1.10 2.00 2.01 2.11 2.20 2.21 2.22 2.23
XPR / XSR							2.0.1 2.0.2	2.0.201 2.0.202 2.0.203 2.0.204 2.0.205	2.0.201 2.0.202 2.0.203 2.0.204 2.0.205 2.0.302 2.0.303 2.0.401 2.0.501* 2.0.502* 2.0.503*	2.0.302 2.0.303 2.0.401 2.0.501 2.0.502 2.0.503	2.0.302 2.0.303 2.0.401 2.0.501 2.0.502 2.0.503	2.0.302 2.0.303 2.0.401 2.0.501 2.0.502 2.0.503	2.0.302 2.0.303 2.0.401 2.0.501 2.0.502 2.0.503	2.0.302 2.0.303 2.0.401 2.0.501 2.0.502 2.0.503

*) Version 11.01 only

Quantos

Type / LabX version	2012 FR2	2013	2014	2014 FR2	2016	2017	2018	2019	V 11	V 11.1	V 12	V 12.1	V 13	V 13.1
XP / XS		1.0.2	1.0.2	1.0.2										

Type / LabX version	2012 FR2	2013	2014	2014 FR2	2016	2017	2018	2019	V 11	V 11.1	V 12	V 12.1	V 13	V 13.1
XPE					2.00	2.00	2.00	2.00	2.00	2.00	2.00	2.00	2.00	2.00
					2.01	2.01	2.01	2.01	2.01	2.01	2.01	2.01	2.01	2.01
						2.11	2.11	2.11	2.11	2.11	2.11	2.11	2.11	2.11
						2.20	2.20	2.20	2.20	2.20	2.20	2.20	2.20	2.20
							2.21	2.21	2.21	2.21	2.21	2.21	2.21	2.21
									2.22	2.22	2.22	2.22	2.22	2.22
									2.23	2.23	2.23	2.23	2.23	2.23

Thermal Value Excellence

Type / LabX version	2012 FR2	2013	2014	2014 FR2	2016	2017	2018	2019	V 11	V 11.1	V 12	V 12.1	V 13	V 13.1
MP70 / MP80 / MP90	1.30	1.30	1.30	1.30	1.30	1.30	2.10	2.10	2.10	2.10	2.10	2.10	2.10	2.10
	1.32	1.32	1.32	1.32	1.32	1.32	2.11	2.11	2.11	2.11	2.11	2.11	2.11	2.11
							3.00	3.00	3.00	3.00	3.00	3.00	3.00	3.00
							3.01	3.01	3.01	3.01	3.01	3.01	3.01	3.01
								4.00	4.00	4.00	4.00	4.00	4.00	4.00
								4.01	4.01	4.01	4.01	4.01	4.01	4.01

Density Refractometry

Type / LabX version	2012 FR2	2013	2014	2014 FR2	2016	2017	2018	2019	V 11	V 11.1	V 12	V 12.1	V 13	V 13.1
DM40 / DM45 / DM50 / DX40 / DX45 / DX50 / RM40 / RM50 / RX40 / RX50	2.0.0	2.0.0	2.0.0	2.6.0	2.6.0	2.6.0	2.6.0	2.6.0	2.6.0	2.6.0	2.6.0	2.6.0	2.6.0	2.6.0
		2.0.1	2.0.1	2.6.1	2.6.1	2.6.1	2.6.1	2.6.1	2.6.1	2.6.1	2.6.1	2.6.1	2.6.1	2.6.1
							2.6.2	2.6.2	2.6.2	2.6.2	2.6.2	2.6.2	2.6.2	2.6.2
D4 / D5 / D6 / R4 / R5 / RX4 / RX5								1.0.0	1.0.0	1.0.0	1.0.0	1.0.0	2.0.0	2.0.1
								1.1.0	1.1.0	1.1.0	1.1.0	1.1.0		
								1.1.1	1.1.1	1.1.1	1.1.1	1.1.1		
								1.1.3	1.1.3	1.1.3	1.1.3	1.1.3		
								1.1.4	1.1.4	1.1.4	1.1.4	1.1.4		

Titration Excellence

Type / LabX version	2012 FR2	2013	2014	2014 FR2	2016	2017	2018	2019	V 11	V 11.1	V 12	V 12.1	V 13	V 13.1
G20			2.0.0	2.0.1	2.0.1	2.0.1	2.0.1	2.0.1	2.0.1	2.0.1	2.0.1	2.0.1	2.0.1	2.0.1
						2.0.2	2.0.2	2.0.2	2.0.2	2.0.2	2.0.2	2.0.2	2.0.2	2.0.2
							2.0.3	2.0.3	2.0.3	2.0.3	2.0.3	2.0.3	2.0.3	2.0.3

Type / LabX version	2012 FR2	2013	2014	2014 FR2	2016	2017	2018	2019	V 11	V 11.1	V 12	V 12.1	V 13	V 13.1
V20 / V30			3.0.0	3.0.1	3.0.1	3.0.1 3.0.2	3.0.1 3.0.2 3.0.3	3.0.1 3.0.2 3.0.3	3.0.1 3.0.2 3.0.3	3.0.1 3.0.2 3.0.3	3.0.1 3.0.2 3.0.3	3.0.1 3.0.2 3.0.3	3.0.1 3.0.2 3.0.3	3.0.1 3.0.2 3.0.3
C20 / C30			3.0.0	3.0.1	3.0.1	3.0.1 3.0.2	3.0.1 3.0.2 3.0.3	3.0.1 3.0.2 3.0.3	3.0.1 3.0.2 3.0.3	3.0.1 3.0.2 3.0.3	3.0.1 3.0.2 3.0.3	3.0.1 3.0.2 3.0.3	3.0.1 3.0.2 3.0.3	3.0.1 3.0.2 3.0.3
T50 / T70 / T90			4.0.0	4.0.1	4.0.1	4.0.1 4.0.2	4.0.1 4.0.2 4.0.3	4.0.1 4.0.2 4.0.3	4.0.1 4.0.2 4.0.3	4.0.1 4.0.2 4.0.3	4.0.1 4.0.2 4.0.3	4.0.1 4.0.2 4.0.3	4.0.1 4.0.2 4.0.3	4.0.1 4.0.2 4.0.3
G20 S					5.0.0	5.1.0	5.2.0	5.3.0 5.3.1	5.3.0 5.3.1	5.3.0 5.3.1	5.4.0 5.4.1 5.5.0	5.4.0 5.4.1 5.5.0	5.4.0 5.4.1 5.5.0	5.4.0 5.4.1 5.5.0
V20 S / V30 S					5.0.0	5.1.0	5.2.0	5.3.0 5.3.1	5.3.0 5.3.1	5.3.0 5.3.1	5.4.0 5.4.1 5.5.0	5.4.0 5.4.1 5.5.0	5.4.0 5.4.1 5.5.0	5.4.0 5.4.1 5.5.0
C20 S / C30 S					5.0.0	5.1.0	5.2.0	5.3.0 5.3.1	5.3.0 5.3.1	5.3.0 5.3.1	5.4.0 5.4.1 5.5.0	5.4.0 5.4.1 5.5.0	5.4.0 5.4.1 5.5.0	5.4.0 5.4.1 5.5.0
T5 / T7 / T9					5.0.0	5.1.0	5.2.0	5.3.0 5.3.1	5.3.0 5.3.1	5.3.0 5.3.1	5.4.0 5.4.1 5.5.0	5.4.0 5.4.1 5.5.0	5.4.0 5.4.1 5.5.0	5.4.0 5.4.1 5.5.0

SevenExcellence

Type / LabX version	2012 FR2	2013	2014	2014 FR2	2016	2017	2018	2019	V 11	V 11.1	V 12	V 12.1	V 13	V 13.1
					3.0.4	4.0.1	4.1.4	4.2.0 4.2.1	4.2.1 4.2.2 4.3.0 4.3.2	4.2.1 4.2.2 4.3.0 4.3.2	4.3.0 4.3.1 4.3.2	4.3.0 4.3.1 4.3.2	4.3.1 4.3.2 4.3.3	4.3.1 4.3.2 4.3.3

UV/VIS Excellence

Type / LabX version	2012 FR2	2013	2014	2014 FR2	2016	2017	2018	2019	V 11	V 11.1	V 12	V 12.1	V 13	V 13.1
UV7 / UV5 / UV5Bio / UV5Nano					1.0.0 1.0.1	1.1.0	2.0.0	2.0.1 2.0.3	3.0.0 3.0.1 3.0.2 3.0.3 3.0.4	3.0.0 3.0.1 3.0.2 3.0.3 3.0.4 3.0.5	3.0.0 3.0.1 3.0.2 3.0.3 3.0.4	3.0.0 3.0.1 3.0.2 3.0.3 3.0.4 3.0.5	3.0.0 3.0.1 3.0.2 3.0.3 3.0.4 3.0.5	3.0.0 3.0.1 3.0.2 3.0.3 3.0.4 3.0.5

Client operating system

Name / LabX Version	Bit	2014 FR2	2016	2017	2018	2019	V 11	V 11.1	V 12	V 12.1	V 13	V 13.1
Windows 7 (Ultimate, Professional, Enterprise)	32 / 64	SP1 / SP1	SP1 / SP1	- / SP1	- / SP1	- / SP1						
Windows 8 (Standard, Pro, Enterprise)	32 / 64											
Windows 8.1 (Standard)	32 / 64	• / •	• / •	- / •	- / •	- / •						
Windows 8.1 (Pro, Enterprise)	32 / 64	• / •	• / •	- / •	- / •	- / •	- / •	- / •				
Windows 10 (Pro, Enterprise)	64		•	V1511	V1607	V1709	V1903 V1909	V1903 V1909	V2004	V2004	V21H2	V22H2
Windows 10 (Long Term Service Branch LTSB)	64		•	•	V1607	V1607	V1607	V1607	V2016	V2016		
Windows 10 (Enterprise Long Term Support Channel LTSC)	64						V1809	V1809	V2019	V2019	V2019 V2021	V2021
Windows 11 (Pro, Enterprise)	64										V21H2	22H2 23H2

Server operating system

Name / LabX Version	Bit	2014 FR2	2016	2017	2018	2019	V 11	V 11.1	V 12	V 12.1	V 13	V 13.1
Windows Server 2008	32 / 64	SP2										
Windows Server 2008 R2	64	SP1	SP1	SP1	SP1	SP1						
Windows Server 2012 (Standard, Foundation, Essentials, Datacenter)	64	•	•	•	•	•	•	•				
Windows Server 2012 R2 (Standard, Foundation, Essentials, Datacenter)	64	•	•	•	•	•	•	•				
Windows Server 2016 (Standard, Essentials, Datacenter)	64				•	•	•	•	V1607	V1607		
Windows Server 2019 (Standard, Essentials, Datacenter)	64						•	•	V1809	V1809	V1809	
Windows Server 2022 (Standard, Datacenter)											•	•

SQL Servers

MS SQL Server / LabX version	2014 FR2	2016	2017	2018	2019	V 11	V 11.1	V 12	V 12.1	V 13	V 13.1
2008 R2	SP2	SP2	SP3	SP3							
2012	SP1	SP1	SP3	SP3	SP4						
2014	•	•	SP1	SP1	SP2	SP3	SP3				
2016				•	SP1	SP2	SP2	SP2	SP2	SP3	
2017					•	CU13	CU13	CU21	CU21	CU27	CU31
2019								CU5	CU5	CU13	CU22
2022											CU7

10.2 Upgrade or downgrade of instrument software

Here you can find the information which instrument software versions can be upgraded or downgraded to which versions.

Balances XPR/XSR - Microbalances & Comparators

From / To	2.0.1	2.0.2	2.0.201	2.0.202	2.0.203	2.0.204	2.0.205	2.0.302	2.0.303	2.0.401	2.0.501	2.0.502	2.0.503
2.0.1		•	•	•	•	•	•	•	•	•	•	•	•
2.0.2	•		•	•	•	•	•	•	•	•	•	•	•
2.0.201	•	•		•	•	•	•	•	•	•	•	•	•
2.0.202	•	•	•		•	•	•	•	•	•	•	•	•
2.0.203	•	•	•	•		•	•	•	•	•	•	•	•
2.0.204	•	•	•	•	•		•	•	•	•	•	•	•
2.0.205	•	•	•	•	•	•		•	•	•	•	•	•
2.0.302	•	•	•	•	•	•	•		•	•	•	•	•
2.0.303	•	•	•	•	•	•	•	•		•	•	•	•
2.0.401	•	•	•	•	•	•	•	•	•		•	•	•
2.0.501	•	•	•	•	•	•	•	•	•	•		•	•
2.0.502			•	•	•	•	•	•	•	•	•		•
2.0.503			•	•	•	•	•	•	•	•	•	•	

Balances XPR/ XSR - Micro analytical & Analytical balances / Comparators & Automatic balances

From / To	2.0.1	2.0.2	2.0.201	2.0.202	2.0.203	2.0.204	2.0.205	2.0.302	2.0.303	2.0.401	2.0.501	2.0.502	2.0.503
2.0.1				•	•	•	•	•	•	•	•	•	•
2.0.2				•	•	•	•	•	•	•	•	•	•
2.0.201				•	•	•	•	•	•	•	•	•	•
2.0.202			•		•	•	•	•	•	•	•	•	•
2.0.203			•	•		•	•	•	•	•	•	•	•
2.0.204			•	•	•		•	•	•	•	•	•	•
2.0.205			•	•	•	•		•	•	•	•	•	•
2.0.302			•	•	•	•	•		•	•	•	•	•
2.0.303			•	•	•	•	•	•		•	•	•	•
2.0.401			•	•	•	•	•	•	•		•	•	•
2.0.501			•	•	•	•	•	•	•	•		•	•
2.0.502			•	•	•	•	•	•	•	•	•		•
2.0.503			•	•	•	•	•	•	•	•	•	•	

Balances XPR/ XSR - Prescision balances / Comparators

From / To	2.0.1	2.0.2	2.0.201	2.0.202	2.0.203	2.0.204	2.0.205	2.0.302	2.0.303	2.0.401	2.0.501	2.0.502	2.0.503
2.0.1		•	•	•	•	•	•	•	•	•	•	•	•
2.0.2	•		•	•	•	•	•	•	•	•	•	•	•
2.0.201	•	•		•	•	•	•	•	•	•	•	•	•
2.0.202	•	•	•		•	•	•	•	•	•	•	•	•
2.0.203	•	•	•	•		•	•	•	•	•	•	•	•
2.0.204	•	•	•	•	•		•	•	•	•	•	•	•
2.0.205	•	•	•	•	•	•		•	•	•	•	•	•
2.0.302	•	•	•	•	•	•	•		•	•	•	•	•
2.0.303	•	•	•	•	•	•	•	•		•	•	•	•
2.0.401	•	•	•	•	•	•	•	•	•		•	•	•
2.0.501	•	•	•	•	•	•	•	•	•	•		•	•
2.0.502			•	•	•	•	•	•	•	•	•		•
2.0.503			•	•	•	•	•	•	•	•	•	•	

Thermal Value Excellence

From / To	2.10	2.11	3.00	3.01	4.00	4.01	
2.10		•					
2.11	•						
3.00				•			
3.01			•				
4.00						•	
4.01					•		

Density Refractometry DM40 / DM45 / DM50 / DX40 / DX45 / DX50 / RM40 / RM50 / RX40 / RX50

From / To	1.0.1	1.0.2	2.0.0	2.0.1	2.5.0	2.6.0	2.6.1	2.6.2	
1.0.1		•							
1.0.2	•								
2.0.0	•	•		•	•	•	•	•	
2.0.1	•	•	•		•	•	•	•	
2.5.0	•	•	•	•		•	•	•	
2.6.0	•	•	•	•	•		•	•	
2.6.1	•	•	•	•	•	•		•	
2.6.2	•	•	•	•	•	•	•		

Density Refractometry D4 / D5 / D6 / R4 / R5 / RX4 / RX5

From / To	1.0.0	1.1.0	1.1.1	1.1.3	1.1.4	2.0.0	2.0.1	
1.0.0		•	•	•	•	•	•	
1.1.0	•		•	•	•	•	•	
1.1.1	•	•		•	•	•	•	
1.1.3	•	•	•		•	•	•	
1.1.4	•	•	•	•		•	•	
2.0.0	•	•	•	•	•		•	
2.0.1	•	•	•	•	•	•		

Titration Excellence T50 / T70 / T90

From / To	4.0.1	4.0.2	4.0.3	
4.0.1		•	•	
4.0.2	•		•	
4.0.3	•	•		

Titration Excellence G20

From / To	2.0.1	2.0.2	2.0.3	
2.0.1		•	•	
2.0.2	•		•	
2.0.3	•	•		

Titration Excellence V20 / V30 / C20 / C30

From / To	3.0.1	3.0.2	3.0.3	
3.0.1		•	•	
3.0.2	•		•	
3.0.3	•	•		

Titration Excellence T5 / T7 / T9 / G20S / V20 S / V30 S / C20 S / C30 S

From / To	5.0.0	5.1.0	5.2.0	5.3.0	5.3.1	5.4.0	5.4.1	5.5.0	
5.0.0		•	•	•	•	•	•	•	
5.1.0	•		•	•	•	•	•	•	
5.2.0	•	•		•	•	•	•	•	
5.3.0	•	•	•		•	•	•	•	
5.3.1	•	•	•	•		•	•	•	
5.4.0	•	•	•	•	•		•	•	
5.4.1	•	•	•	•	•	•		•	

From / To	5.0.0	5.1.0	5.2.0	5.3.0	5.3.1	5.4.0	5.4.1	5.5.0	
5.5.0	•	•	•	•	•	•	•		

SevenExcellence

From / To	3.0.4 *)	4.0.1 *)	4.1.4	4.2.0	4.2.1	4.3.0	4.3.1	4.3.2	4.3.3
3.0.4		•	•	•	•	•	•	•	•
4.0.1	•		•	•	•	•	•	•	•
4.1.4	•	•		•	•	•	•	•	•
4.2.0	•	•	•		•	•	•	•	•
4.2.1	•	•	•	•		•	•	•	•
4.3.0	•	•	•	•	•		•	•	•
4.3.1	•	•	•	•	•	•		•	•
4.3.2	•	•	•	•	•	•	•		•
4.3.3	•	•	•	•	•	•	•	•	

*) These software versions are not compatible with instruments prior to serial number B733527059.

UV/VIS Excellence

From / To	1.0.0	1.0.1	1.1.0	2.0.0	2.0.1	3.0.0	3.0.1	3.0.2	3.0.3	3.0.4	3.0.5	
1.0.0		•	•	•	•	•	•	•	•	•	•	
1.0.1	•		•	•	•	•	•	•	•	•	•	
1.1.0	•	•		•	•	•	•	•	•	•	•	
2.0.0	•	•	•		•	•	•	•	•	•	•	
2.0.1	•	•	•	•		•	•	•	•	•	•	
3.0.0	•	•	•	•	•		•	•	•	•	•	
3.0.1	•	•	•	•	•	•		•	•	•	•	
3.0.2	•	•	•	•	•	•	•		•	•	•	
3.0.3	•	•	•	•	•	•	•	•		•	•	
3.0.4	•	•	•	•	•	•	•	•	•		•	
3.0.5	•	•	•	•	•	•	•	•	•	•		

10.3 CPU benchmarks

This is a list of reference values for evaluating the performance of CPUs according to "CPU Benchmark".

CPU name	CPU mark
Intel ® Xeon (R) CPU E3-1220v2@ 3.10 GHz	4706
Intel ® Xeon (R) CPU E31225@ 3.10 GHz	3574
Core i5-2400 @ 3.10GHz	3796
Intel Core i7-2670QM @ 2.20GHz	3730

https://www.cpubenchmark.net

10.4 Accessories

In addition the instruments that can be connected to LabX, the following accessories are supported by LabX.

10.4.1 Fingerprint Reader

The fingerprint reader can be used to authenticate a user by using a fingerprint.

Model
digitalPersona (Driver version 2.3.1.767)

10.4.2 Barcode Reader

The barcode reader can be used to start methods, sample series and products.

Model
Any windows compatible barcode reader
Support linear barcodes: 25, 39, 93, 128 A/B/C, EAN 5/8/13, GS-128

https://www.activebarcode.de/codes

10.4.3 Label Printer

The following label printers are supported by LabX.

Model
Zebra TPL-2844

10.5 Security and rights

The installer of the LabX system requires administrator privileges on all LabX computers and on the database system. For creating a backup or maintaining the LabX database, administrator or DB owner privileges are required as well. Standard PC client users or users on instruments do not require any additional rights.

LabX Service Account

The services of LabX run by default under the internal Network Service user which has extended rights on the computer. When LabX is printing on network printers or the LabX system is installed in distributed mode, a user LabX Service Account should be created to run the LabX services. The LabX Service Account requires the following permissions.

For LabX Service Account used in connection with Active Directory authentication see Configuring Single Sign-On (SSO).

The service account requires read rights for users and computers in Active Directory.

File system permissions

The LabX Service Account requires to read all files in the installation directory of LabX. Also it must be able to write on several files as shown in the following list:

Location		Permission	Applies to server
LabX\	Dir	Read / Execute / Write	Business Server/Instrument Server
- Log\	Dir	+ Write	Business Server/Instrument Server
- Licensing\	Dir	+ Write	Business Server
- Ltfm.dat	File	+ Write	Business Server
Export Directories	Dir	+ Write	Business Server
Import Directories	Dir	+ Write	Business Server

Windows permission

Additional to the file permission the LabX Service Account has to be a member of the windows domain. The user has to be able to access the printers that will be used in LabX and needs the "Logon as Service" privilege.

Machine key store permissions

As the LabX system encrypts data, the LabX Service Account requires access to the given "Machine Key Store". You will find more information on that topic under:

https://docs.microsoft.com/en-us/windows/win32/seccng/key-storage-and-retrieval.

Location	Permission	Applies to server
Keystore "SequoiaPasswordContainer" (2d38db507644999e24add5e4b60f96c1 _xxxxxxxx-xxxx-xxxx-xxxx-xxxxxxxxxxxx)	Read	Business Server

http namespace permissions

The LabX Service Account does also require permission on the following "http namespaces" to create the needed services. Default ports 51152, 51153 and 51154 on the LabX system can be changed during installation.

Location	Permission	Applies to server
http://servername:51153/LabX/BusinessService/meta	Generic All	Business Server

Location	Permission	Applies to server
http://servername:51152/LabX/DoorBellService	Generic All	Business Server
http://servername:51156/LabX/SystemIntegrationService	Generic All	Business Server
http://servername:51156/LabX/BasicSystemIntegrationService	Generic All	Business Server

Database permissions

During installation, the installer offers to either install an SQL Server Express Edition or to use an existing database server. In the latter case, the database administrator is responsible to prepare the database server for LabX by creating the database and granting permissions.

The administrator installing LabX on a dedicated SQL database server, is ideally owner of the LabX database. The LabX Service Account should have reading and writing permissions within the LabX database. This is configured by the LabX installer.

Recommendation

Run the LabX services under a dedicated service account instead of the built-in one (like LocalSystem or Network Service). It is possible to run the Business Server under a different service account than the Instrument Server. This may be desirable when using Single Sign-On with the assignment of service principal names, since this is only required for the Business Server.

10.5.1 Configuring Single Sign-On (SSO)

Description for Windows Security, Kerberos Authentication. This description is valid only if the Single Sign-On function is used, and the LabX business server is not operated using the Network Service account.

▸ https://docs.microsoft.com/en-us/windows/win32/secauthn/microsoft-kerberos

The SPN (service principal name) service is used to authenticate Single Sign-On users in LabX.

▸ https://docs.microsoft.com/en-us/windows/win32/ad/service-principal-names.

Before the Kerberos authentication service can use an SPN to authenticate a service, the SPN must be registered on the account object that the service instance uses to log on. For LabX, the SPN must be registered for the LabX business service user.

There are two options to register a SPN:

1. Domain account

To register the SPN to the service account using the Setspn tool, the caller must have write-access to the servicePrincipalName attribute of the target account.

▸ https://docs.microsoft.com/en-us/previous-versions/windows/it-pro/windows-server-2012-r2-and-2012/cc731241(v=ws.11)

Typically, write access is granted by default only to domain administrators.

▸ https://docs.microsoft.com/en-us/windows-server/networking/sdn/security/kerberos-with-spn

2. Network service or Local System user

For local services, the system allows a service to run under the LocalSystem account to register its own SPNs on the computer account of the service's host. In this case, the caller does not require write-access to the servicePrincipalName attribute of the target account.

▸ https://docs.microsoft.com/en-us/windows-server/networking/sdn/security/kerberos-with-spn

Impact on the installation of LabX

No additional action are to be considered if the LabX business server is operated using the network service credentials. Otherwise the following manual steps are required to secure the Active Directory authentication:

- Define a unique SPN
  (ex. LabX/$LabXBusinessServerDNSName$)

▸ https://docs.microsoft.com/en-us/windows/win32/ad/service-principal-names.

- Register the SPN for the LabX service account using Setspn
  (ex. setspn.exe –U –A LabX/$LabXBusinessServerDNSName$ DOMAIN\SERVICEACCOUNT)

▸ https://docs.microsoft.com/en-us/previous-versions/windows/it-pro/windows-server-2012-r2-and-2012/cc731241(v=ws.11)

By default the caller requires to be a member of the domain administrators.

▸ https://docs.microsoft.com/en-us/windows-server/networking/sdn/security/kerberos-with-spn

- On all LabX client machines edit the configuration file of the PC Client. ($LabXInstallationDirectory$\LabXClient.exe.config)

Remove the following line:

```
<endpoint name="ActiveDirectoryAuthenticationService"
binding="netTcpBinding"
bindingConfiguration="ActiveDirectoryAuthenticationBinding"
contract="MT.Sequoia.Platform.Business.Contracts.IActiveDirectory
AuthenticationService"/>
```

Insert the following line:

The placeholder $NetTcpBusinessServiceTransportBindingEndpointAddress$ has to be replace by the endpoint address of the LabX Business Service

```
<endpoint address="net.tcp://$NetTcpBusinessServiceTransportBinding$/LabX/
ActiveDirectoryAuthenticationService"
name="ActiveDirectoryAuthenticationService"
binding="netTcpBinding"
bindingConfiguration="ActiveDirectoryAuthenticationBinding"
contract="MT.Sequoia.Platform.Business.Contracts.IActiveDirectory
AuthenticationService">
  <identity>
     <servicePrincipalName value="LabX/$LabXBusinessServerDNSName$"/>
  </identity>
</endpoint >
```

10.6 Handling of passwords in LabX

Transmission of passwords between instrument and LabX server

Public key cryptography (RSA with a key length of 1024 bit) is used to secure the transmission of passwords in LabX.

This mechanism is applied for transferring all kind of passwords, independent if Active Directory credentials or the LabX internal credentials for authentication are configured.

Limitation: In the current version of LabX, instruments do not validate the authenticity of the LabX server with the effect that there is no man-in-the-middle (MITM) protection available. If enabling the Active Directory authentication, we recommend connecting the instruments via an isolated network to the LabX system and prevent physical access to it.

Transmission of passwords between PC Client and the server

- If Active Directory credentials are used in combination with Single Sign-On (SSO), the Microsoft Windows internal (Kerberos) transmission method is used. In this mode LabX does not transfer any password over the wire.
- If the LabX internal credentials or the Active Directory credentials are used for authentication without Single Sign-On (SSO), public key cryptography (RSA with a key length of 1024 bit) is used to secure the transmission of passwords in LabX.

Limitation: In the current version of LabX the PC clients do not validate the authenticity of the LabX system with the effect that there is no man-in-the-middle (MITM) protection available. If enabling the Active Directory authentication, we recommend to activate the Single Sign-On (SSO) feature.

Storing of passwords

- If internal authentication is configured, the salt (cryptography) and the password are processed with a cryptographic hash function, and the resulting output is stored in a database. To generate hash values, the SHA-1 algorithm is used with a hash size of 160 bit.
- If Active Directory authentication is configured, no password related data is stored in the database.

See also

RSA:

https://en.wikipedia.org/wiki/RSA_(cryptosystem)

SSO:

https://en.wikipedia.org/wiki/Single_sign-on

Kerberos:

https://docs.microsoft.com/en-us/windows/win32/secauthn/microsoft-kerberos

SHA-1:

https://docs.microsoft.com/en-us/dotnet/api/system.security.cryptography.sha1?view=netcore-3.1

10.7 Service dependencies

The LabXHostService depends on the following Windows services.

- DHCP
- RPCSS
- Sens
- Winmgmt
- SQL Server (only if locally installed)

Although the LabXHostService has no direct dependency on the firewall service, it must be enabled during the installation to be capable to change the firewall settings.

Note

- A correct WinHTTP Proxy (proxycfg.exe) configuration is necessary, otherwise the LabXHostService cannot start. Alternative: Disable "Root Certificat Update" in Add/Remove "Windows Features".

10.8 Network performance

In general, the network connection between all components requires low latency and low packet loss rates. All network components should be designed and operated to support 1 Gbit/s Ethernet.

All following figures are indicative only. The effective link speed depends heavily on the type of instrument, the kind of measurement and running report generations. Titrators generally require more bandwidth than balances. Balance interval weighing measurements require more bandwidth than single weight measurements.

Required link speed between PC clients and Business Server

As a base value, 0.2 Mbit/s is required for each open workbench (T9 and T90 count double to visualize the data in "real time". In addition, high peak loads depend on the user's actions, e.g. opening the result set of an extensive task. The network infrastructure must be appropriately dimensioned to achieve good system performance.

Required link speed between Instrument Server and connected instruments

As a base value, 0.2 Mbit/s is required for each running task.

Required link speed between Instrument Server and Business Server

As a base value, 0.2 Mbit/s is required for each running task. In addition, high peak loads depend on user actions, e.g. viewing results of extensive tasks on the instrument. The network infrastructure must be appropriately dimensioned to achieve good system performance.

Required link speed between the Business Server and the database

As a base value, 0.4 Mbit/s is required for each running task. In addition, high peak loads depend on the performed actions of all connected users. The network infrastructure must be appropriately dimensioned to achieve good system performance.

10.9 Arithmetic model

Calculations in LabX are performed according to IEEE-754-2008. The IEEE 754 standard requires support for a number of operations. These include arithmetic operations such as add, subtract, multiply, divide, square root, conversion operations, scaling, and comparisons. The results of these operations are to be the same for all implementations of the standard, for a given format and rounding mode.

10.9.1 Computations and accuracy

LabX performs each of the computational operations that return a numeric result by using the maximum available accuracy and then performs the rounding as the last step, according to the settings in the result calculations if necessary.

Example

Where N is a number and R a result.

- Result R1 to be presented to the nearest 3 decimal points.

N1		1.123456
N2	+	1.1234567
R1 without rounding	=	2.2469127
R1 with rounding		**2.247**

- Result R2 to be presented to the nearest 4 decimal points.
- N3 = 2.21311
- R2 = R1 + N3

R1		2.247
N3	+	2.21311
R2 without rounding	=	4.46011
R2 with rounding		**4.4601**

Note

For R2 the available accuracy regarding R1 is three decimals and not the full accuracy, according to the settings in the result calculations.

10.9.2 Infinity and NaN

- For both "NaN" and "Infinity", LabX indicates all result states as Not OK .
- LabX preserves all representations of "NaN" and "Infinity" numbers upon importing and exporting data.

10.9.3 Rounding

LabX is applying the default rounding of the IEEE-754 for all computations. Negative and positive numbers are treated the same way by "Round half to even". This procedure treats positive and negative values symmetrically, and is free of sign bias.

Examples

Number	Number rounded
+ 13.5	+ 14
+ 14.5	+ 14
– 13.5	– 14
– 14.5	– 14

All numbers are rounded to +14 or –14 because it is an even number. All other numbers which are not ending in 0.5 round to nearest digit as usual.

Further examples

Number	Number rounded
+ 13.6	+ 14
– 13.4	– 13
+ 6.6	+ 7
+ 6.4	+ 6

Note

- Results of the method function Piece counting are received from balances that use "Round half away from zero" for rounding. If a method for piece counting is combined from other method functions, the results may be different, because LabX uses "Round half to even" for rounding.

10.9.4 Trailing zeroes in calculations and results

LabX adds trailing zeros according to the settings in the result calculations.

Example

Where N is a number and R a result.

N1 entered as 1.2		1.2
R2 is defined to 2 decimal places	+	1.23
R3 is defined to 4 decimal places	=	**2.4300**

10.9.5 Significant digits

LabX is using fix point arithmetic based on the "Microsoft .NET data type decimal". For database persistence reasons LabX supports 14 digits before and after the decimal separator.

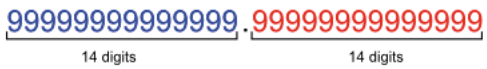

Significant digits



When using the calculation functions the significant digits are limited to 15. This is related to the internal Microsoft .NET data type double conversion. At the end a decimal is used to store the data. Because of the floating point behaviour, the decimal point is not fix.

1. ln
2. logb
3. log
4. ND
5. NDn-1
6. Pow
7. RSD
8. RSDn-1
9. Sqrt
10. SD
11. SDn-1

See also

Microsoft .NET data type decimal:

https://docs.microsoft.com/en-us/dotnet/api/system.decimal?view=netcore-3.1

10.9.6 Standard deviation

LabX statistic calculations follow the Bessel's correction. For sample standard deviation n – 1 is used, where n is the number of observations in a sample. This corrects the bias in the estimation of the population variance, and some of the bias in the estimation of the population standard deviation.

To protect your product's future:
METTLER TOLEDO Service assures the quality, measuring accuracy and preservation of value of this product for years to come.

Please request full details about our attractive terms of service.

www.mt.com/service

www.mt.com/labx
For more information

Mettler-Toledo GmbH
Im Langacher 44
8606 Greifensee, Switzerland
www.mt.com/contact

Subject to technical changes.
© 03/2024 METTLER TOLEDO. All rights reserved.
51710927N en

51710927